ATLANTIS
TECHNOLOGIES LLC

STANDARD PRODUCTS
& SELECTED CUSTOM EQUIPMENT

2026
CATALOG

724-695-2900

mail@atlantisllc.com

www.atlantisllc.com

2525 Quicksilver Rd.
McDonald, PA 15057

All product pricing and availability
subject to change without notice

TABLE OF CONTENTS

Pumps & Controls

About Atlantis 6

Catalog Mission . . . 6
Custom Engineering Capabilities . . . 7

Chemical Metering Pumps 8

Walchem Diaphragm Pumps . . . 8
Sydex Progressive Cavity Pumps . . . 16
Watson-Marlow Qdos Peristaltic Pumps . . . 17
Blue-White ProSeries Pumps . . . 19
Iwaki Air Pumps . . . 23
Flux Pump Motors . . . 24
Flux Pump Tubes . . . 25

Cooling Tower Systems 26

Walchem Controller Overview . . . 26
Controllers - No Panel . . . 27
Controllers - Panel Mounted . . . 29
Cooling Tower Panels . . . 30
I6 Cooling Tower Panel Options . . . 31
Cooling Tower Conductivity Probes . . . 34

Boiler Control Systems 35

Boiler Panels . . . 35
Boiler Feedwater Panels . . . 35
Boiler Feedwater Panels Continued . . . 36
W100 Boiler Controllers . . . 36
Boiler Water Panels . . . 36
Boiler Panel Accessories . . . 36
Other Boiler Panels . . . 36
Boiler Conductivity Probes . . . 38

Conductivity Probes 39

General & Condensate Conductivity Probes . . . 39
Electrodeless Conductivity Probes . . . 40

pH/ORP Controllers & Sensors 41

W100 Controllers . . . 41
I6 Controllers . . . 42
I6 Controller Configuration Matrix . . . 43
Walchem WEL pH Sensors . . . 45

TABLE OF CONTENTS

Instrumentation, Polymer Systems & Tanks

Replacement Cartridges, ORP Sensors & Housings . . . 46
Differential & High-Temperature Electrodes . . . 48
GF Signet pH & ORP Probes . . . 49

Controller Accessories **51**

Cellular Modems . . . 51
Wireless Access Point . . . 51

Keyence Clamp-On Flow Sensors **52**

FD-Q Series . . . 52
FD-R Series . . . 53
FD-X Series . . . 54
Flowmeter Ordering Checklist . . . 55

Polymer Systems & Enclosures **56**

A-15600 Polymer Makedown System . . . 56
A-15400 Progressive Cavity System . . . 57
A-15500 / EM Series Polymer Systems . . . 58
A-15700 Peristaltic Systems . . . 59
Heated Enclosures . . . 61

Pyxis Instruments **62**

Handheld Portable Devices . . . 62
Inline Probes . . . 63

Chemical Storage Tanks **64**

Assmann Single Wall Tanks . . . 64
Single Wall Tank Fitting Packages . . . 66
Small Double Wall Tanks . . . 67
Large Double Wall Tanks . . . 68

Chemical Feed Stations **69**

CFS Tank Systems . . . 69
CFS Plastic Pump Shelves . . . 70
CFS Plastic Tank Stands . . . 70
CFS Calibration Tubes . . . 71

Tank Accessories **72**

Krueger Sentry At-A-Glance Level Gauge . . . 72
Flowline Radar & Ultrasonic Level Sensors . . . 73

TABLE OF CONTENTS

Mounting, Valves & General Accessories

Flowline Optic Leak Detector . . . 75
Tote Bin Pump Boxes & Sight Gauges . . . 76
Tote Bin Recirculation System . . . 77

Coupon Racks & Mounting 78

Standard Coupon Racks. . . . 78
Pump Shelf Wall Mounts / A-16109 Configurations . . . 79

Valves & Water Meters 80

Flow Control Dole Valves . . . 80
ASCO Cooling Tower Blowdown Solenoid Valves . . . 81
CTV Valves . . . 82
BLR Valves . . . 83
AT Series Multi-Jet Cold Water Meters. . . . 84

Boiler Valves & Accessories 85

BLR-1000 Series Valves . . . 85
Flowserve Boiler Blowdown Valves . . . 86
Orifice Unions / Plates . . . 87

General Accessories 88

Calibration Tubes . . . 88
Glass Calibration Cylinders. . . . 89
Sigmamotor Back Pressure & Pressure Relief Valves. . . . 90
Sigmamotor Pulsation Dampeners . . . 91
Sigmamotor 4-inch Injection Quills. . . . 92
Walchem Injection Quills. . . . 93
Tri-Purpose Valves . . . 94
Pressure Gauge Chemical Seal / Isolator . . . 95
Pump Shelf / Wall Mounting Bracket . . . 95
Foot Valves . . . 96
PowerTurn Machine Gauge Guards . . . 98

Compression Fittings 99

Overview & Male Connectors . . . 99
Female, Union & Reducing Union Connectors . . . 100
Bulkhead Union, Union Elbow & Union Tee . . . 101
Male Branch Tee & Male Elbow . . . 102
Male Run Tee & Female Elbow . . . 103

CATALOG MISSION

Welcome to the Atlantis Technologies product catalog. This catalog features a selection of the products most commonly used throughout the specialty chemical industry, providing a convenient reference for many of your day-to-day application needs.

Atlantis Technologies LLC designs and manufactures many of the products featured in this catalog and specializes in engineering complete systems tailored to your specific application. If you don't see exactly what you need, please contact us at 724-695-2900. Our team will be happy to help identify the right solution for your process.

In addition to our own products, Atlantis Technologies is a master stocking distributor for Walchem Corporation, maintaining inventory of many of their industry-leading products. We also proudly distribute and represent a number of other respected manufacturers, including:

•Assmann Corporation of America •Flowline
•Iwaki Air •Pyxis Lab •Blue-White •Griffco •FLUX •Krueger Sentry Gauge
•Keyence •Sensorex •Watson-Marlow •PowerTurn Machine

CUSTOM ENGINEERING CAPABILITIES

Atlantis Technologies specializes in the engineering and manufacturing of custom fluid handling and chemical feed systems. From simple pump skids to fully integrated turnkey systems for boilers, cooling towers, and industrial water treatment applications, we design solutions tailored to each customer's unique requirements.

The examples in this section highlight just a small sampling of the custom systems we have built. Backed by extensive engineering expertise and in-house manufacturing capabilities, Atlantis produces many of the components used in both our standard and custom products. Our capabilities include precision CNC machining, fabrication, assembly, testing, and system integration to ensure the highest levels of quality and performance.

Contact us today to discuss your application and learn how we can develop a system specifically for your needs.

CHEMICAL METERING PUMPS

WALCHEM Diaphragm Pumps

Walchem and Iwaki leverage over a century of combined application and engineering expertise to deliver the EWP Series Metering Pumps – an advanced product line optimized for precision chemical dosing across a broad range of industrial applications. The EWP Series pumps offer flow rates up to 6.7 GPH (25 l/h) and pressure capabilities reaching 300 PSI (20 bar), all within a compact, rugged housing rated to IP66 and a footprint designed for easy installation or ideal for OEM integration.

All pumps listed below are standard models stocked in Atlantis inventory. Additional pump models are available through Walchem and can be included through special order.

CC DESIGNATION
V - This option will work with off-gassing chemicals such as sodium hypochlorite (chlorine bleach) and hydrogen peroxide (up to 50%). PVC head and fittings with ceramic balls, FKM (Viton) seats and seals. P/Ns that end with “RA” include an off-gassing valve and should not be used in application with a flooded suction.
T - This option is for glutaraldehyde and strong acids such as hydrochloric or sulfuric. PVDF (Kynar) head and fittings with ceramic balls, a Teflon seat, and AFLAS seal.
P – This head will work with the majority of your chemicals. GFRPP head and fittings with ceramic balls, a Teflon seat, and AFLAS seals.

EWP-L Series (0.6-6.7 GPH, 175 PSI max)

Engineered for both reliability and versatility, the EWP-L features external analog and simple digital pulse input control as well as manual control with an 1800:1 turndown ratio. Its high-speed 360 strokes-per-minute operation ensures consistent performance, while its robust priming capability and durable construction make it the optimal choice for any cost-effective, high-precision chemical injection applications.

Simple operation and adjustment with two control knobs, flowrates up to 6.7 GPH (25 l/h) and pressure capability to 175 psi (12 bar) enable the EWP-L to easily fit into most applications.

CC	P/N	MAX OUTPUT GPH	MAX PRESSURE PSI	LIST PRICE	REPAIR KIT	LIST PRICE	PREVIOUS P/N
V	EWP-035BVC07A-USL	0.6	150	$614.00	N11VCA-PK	$154.00	EZB11D1-VCA
P	EWP-045BPA07N-USL	0.7	150	$586.00	N11PA-PK	$150.00	EZB11D1-PA
P	EWP-045BPE07N-USL	0.7	150	$504.00	N11TA-PK	$180.00	EZB11D1-PE
T	EWP-045BTA07N-USL	0.7	150	$772.00	N11TA-PK	$180.00	EZB11D1-TA
V	EWP-045BVC07N-USL	0.7	150	$504.00	N11VC-PK	$72.00	EZB11D1-VC
V	EWP-045BVE07N-USL	0.7	150	$504.00	N11VE-PK	$72.00	EZB11D1-VE
V	EWP-055CVC07A-USL	0.9	105	$634.00	N16VCA-PK	$160.00	EZB16D1-VCA
P	EWP-075CPA07N-USL	1.2	105	$605.00	N16PA-PK	$156.00	EZB16D1-PA
V	EWP-075CVE07N-USL	1.2	105	$524.00	N16VE-PK	$80.00	EZB16D1-VE
P	EWP-130DPA07N-USL	2	105	$885.00	N21PA-PK	$164.00	EZC21D1-PA

EWP-R Series (0.2-6.7 GPH, 300 PSI max)

Engineered for both reliability and versatility, the EWP-R offers programmable analog and digital pulse input control in a fully featured control unit.

With 1800:1 turndown ratio and high-speed 360 strokes-per-minute operation, the EWP-R ensures consistent high-resolution performance. The backlit LCD and a large multicolor LED provide clear indication of display and operational status. Advanced control, high turndown, robust priming capability and durable construction make it the optimal choice for any cost-effective, high-precision chemical injection application.

Flowrates up to 6.7 GPH (25 l/h) and pressure capability to 300 psi (20 bar) enable the EWP-R to maximize value in most chemical delivery applications.

CC	P/N	MAX OUTPUT GPH	MAX PRESSURE PSI	LIST PRICE	REPAIR KIT	LIST PRICE	PREVIOUS P/N
P	EWP-038BPA07H-USR	0.6	290	$907.00	N11PAH-PK	$217.00	EWN-B11PAURH
P	EWP-045BPA07N-USR	0.7	150	$828.00	N11PA-PK	$150.00	EWN-B11PAUR
V	EWP-062DVC07C-USR	1	105	$1,220.00	N21VCA-PK	$168.00	EWN-C21VCURC
P	EWP-075CPA07N-USR	1.2	105	$863.00	N16PA-PK	$156.00	EWN-B16PAUR
T	EWP-075CTA07N-USR	1.2	105	$1,062.00	N16TA-PK	$186.00	EWN-B16TAUR
P	EWP-080CPA07N-USR	1.3	150	$1,146.00	N16PA-PK	$156.00	EWN-C16PAUR
P	EWP-130DPA07N-USR	2	105	$1,183.00	N21PA-PK	$164.00	EWN-C21PAUR

LK Series (9.5 - 114.3 GPH, 225 PSI Max)

The LK series is Walchem's largest metering pump. The LK is a motor-driven mechanically-actuated diaphragm pump with a maximum capacity from 9.5 to 114.3 GPH at pressures up to 225 PSI when equipped with a stainless-steel head. These pumps offer micrometer dial stroke adjustments to provide 10% to 100% control of the output.

Listed in the following table are the pumps that we typically sell with their maximum outputs and pressures.

NOTE: *LK series pumps require pressure relief valves and anti-siphon valves.*

CC DESIGNATION
C – This option will work with most low pH chemicals and off-gassing chemicals such as sodium hypochlorite (chlorine bleach) and hydrogen peroxide (up to 50%). PVC head and fittings with ceramic balls, FKM (Viton) seats and seals.
H – This option will work with the majority of your higher pH chemicals such as caustic. PVC head and fittings with Hastelloy C276, PVC seats, and EPDM seals.

All of these pumps shown have 115 VAC single-phase 1/3 HP motors. Walchem offers other LKN pumps in various materials and motor options including 3 Phase, Inverter Duty, DC, and Explosion Proof Motors. If you do not see what you need in the following chart, please contact Atlantis to discuss other alternatives.

CC	P/N	MAX OUTPUT GPH	MAX PRESSURE PSI	LIST PRICE	REPAIR KIT	LIST PRICE
C	LKN32A-VC	9.5	150	$2,390.00	L3VC-PK	$166.00
H	LKN32A-VH	9.5	150	$2,424.00	L3VH-PK	$189.00
C	LKN45A-VC	15.9	150	$2,685.00	L4VC-PK	$252.00
H	LKN45A-VH	15.9	150	$2,724.00	L4VH-PK	$280.00
C	LKN47A-VC	31.8	150	$2,816.00	L4VC-PK	$252.00
H	LKN47A-VH	31.8	110	$2,856.00	L4VH-PK	$280.00
C	LKN55A-VC	53.4	150	$2,985.00	L5VC-PK	$359.00
H	LKN55A-VH	53.4	90	$3,026.00	L5VH-PK	$384.00
C	LKN57A-VC	114.3	45	$3,115.00	L5VC-PK	$359.00
H	LKN57A-VH	114.3	45	$3,157.00	L5VH-PK	$384.00

IX Series (2.0 - 79.2 GPH, 250 PSI max)

The IX Series is a digitally controlled direct-drive diaphragm pump. The IX comes in two pump ranges of 15.8/145 and 79.2 GPH/PSI. The pumps have a high turndown ratio of 750:1 and have an accuracy of +/-1%. These pumps prime extremely well, suction speed is constant, and discharge speed is reduced as the pump is turned down, helping to reduce pulsation and inertial forces on the piping. The digital control allows the user to have external stop/start, programmable 4-20mA input, and digital pulse input with pulse multiplier/divider control. You can adjust the suction speed to prevent cavitation with highly viscous liquids.

The user interface can be ordered in six positions so that it can be mounted on the sides, top, or back of the pump.

CC DESIGNATION
C – This option will work with most low pH chemicals and off-gassing chemicals such as sodium hypochlorite (chlorine bleach) and hydrogen peroxide (up to 50%). PVC head and fittings with ceramic balls, FKM (Viton) seats and seals.
E – This option will work with the majority of your higher pH chemicals such as caustic. PVDF (Kynar) head and fittings with ceramic balls, a EPDM seat and seals.

Walchem also offers the IX pumps in 316 Stainless Steel and Teflon. If you do not see what you need in the following chart, please contact Atlantis to discuss other alternatives.

CC	P/N	MAX OUTPUT GPH	MAX PRESSURE PSI	LIST PRICE	REPAIR KIT	LIST PRICE
C	IX-B007TCN-U	2	250	$2,180.00	IXB007TEN-PK	$354.00
E	IX-B007TEN-U	2	250	$2,180.00	IXB007TEN-PK	$354.00
C	IX-B015TCN-U	4	145	$2,265.00	IXB015TCN-PK	$391.00
E	IX-B015TEN-U	53.4	145	$2,265.00	IXB015TEN-PK	$391.00
C	IX-B030TCN-U	7.9	87	$2,385.00	IXB030/45TCN-PK	$522.00
E	IX-B030TEN-U	7.9	58	$2,385.00	IXB030/45TEN-PK	$522.00
C	IX-B045TCN-U	11.9	58	$2,505.00	IXB030/45TCN-PK	$522.00
E	IX-B045TEN-U	11.9	58	$2,505.00	IXB030/45TEN-PK	$522.00
C	IX-C060TCN-LF-U	15.8	145	$3,822.00	IXC060TC-PK	$359.00
E	IX-C060TEN-TB-U	15.8	145	$3,763.00	IXC060TE-PK	$359.00
C	IX-C150TCN-TB-U	39.6	58	$3,961.00	IXC150TC-PK	$462.00
E	IX-C150TEN-TB-U	39.6	58	$3,961.00	IXC150TE-PK	$462.00
C	IX-D150TCN-TB-U	39.6	145	$6,571.00	IXD150TC-PK	$810.00
E	IX-D150TEN-TB-U	39.6	145	$6,571.00	IXD150TE-PK	$810.00
C	IX-D300TCN-TB-U	79.2	73	$7,149.00	IXD300TC-PK	$1,124.00
E	IX-D300TEN-TB-U	79.2	73	$7,149.00	IXD300TE-PK	$1,124.00

The 2.0 GPH, 4.0 GPH, 7.9 GPH, and 11.9 GPH pumps come with 3/8” x 1/4” tubing or 1/2” MNPT connections. The 15.8 GPH pumps come with 1/2” MNPT connections, the 39.6 GPH pumps come with 3/4” MNPT connections, and the 79.2 GPH pumps come with 1” MNPT connections.

High Viscosity Series (2.4 to 114.3 GPH, 150 PSI max)

The HV series is specifically designed to accurately feed high viscosity chemicals. The EWN and EHE pumps are rated to 20,000 CPS and can achieve flows up to 8 GPH and pressures of 73 PSI. These pumps offer 0-240 SPM digital speed control, external stop/start, programmable 4-20mA input, and digital pulse input with pulse multiplier/divider control.

Listed in the following table are the pumps that we typically sell with their maximum outputs and pressures. Please contact Atlantis if you would like to discuss other alternatives if you do not see what you need in the following chart.

P/N	MAX OUTPUT GPH	MAX PRESSURE PSI	LIST PRICE	REPAIR KIT	LIST PRICE
EWP-150EPC11V-USR-S	2.3	73	$1,105.00	N31PCVS-PK	$232.00
EHE36E1-HVT	4	73	$1,914.00	E36HVT-PK	$254.00
EHE46E1-0033	8	50	$1,926.00	E46HV-0033-PK	$221.10
LKN32A-VS	9.5	150	$2,424.00	L4VH-PK	$280.00
LKN45A-VS	15.9	150	$2,724.00	L4VC-PK	$252.00
LKN47A-VS	31.8	120	$2,856.00	L4VH-PK	$280.00
LKN55A-VS	53.4	75	$3,026.00	L5VC-PK	$359.00
LKN57A-VS	114.3	45	$3,157.00	L5VH-PK	$384.00

SYDEX PUMPS 0-14 GPH Progressive Cavity

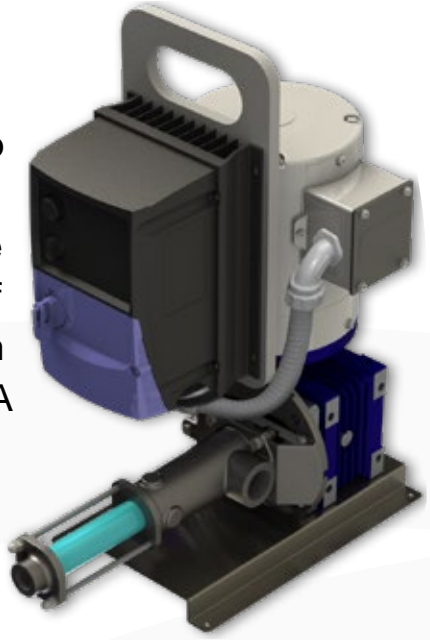

The following Sydex progressive cavity pumps have no check valves to plug. They are sold with a 316 Stainless Steel body and rotor with Viton stator with multiple available size inlets and outlets. The pumps include multiple size options of a Marathon Inverter Duty Washdown AC motor driven by an AC Tech Variable Frequency Drive that can accept a 4-20mA remote speed signal. They are excellent for feeding polymers and will pass anything smaller than 1/4" through the pump without plugging. These pumps can generate 100 PSI and can be produced in many sizes. Listed below are the most common.

Please note that these pumps cannot run dry.

P/N	DESCRIPTION	LIST PRICE
A-15000-001	0.001 to .152 GPH (0.63- 9.58 ml/min) Sydex Progressive Cavity Pump, 250PSI max, SS and Viton, AC Tech VFD. 4-20mA remote input, 115 VAC, 6 Amps	$6,880.00
A-15000-006	0.006 to .6 GPH Sydex Progressive Cavity Pump, 150PSI max, SS and Viton, AC Tech VFD. 4-20mA remote input, 115 VAC, 6 Amps	$5,820.00
A-15000-020	0.02 to 2. GPH Sydex Progressive Cavity Pump, 250PSI max, SS and Viton, Invertek VFD. 4-20mA remote input, 115 VAC, 6 Amps	$5,120.00
A-15000-040	0.044 to 4.4 GPH Sydex Progressive Cavity Pump, 250PSI max, SS and Viton, AC Tech VFD. 4-20mA remote input, 115 VAC, 6 Amps	$5,120.00
A-15000-060	0.66 to 6.6 GPH Sydex Progressive Cavity Pump, 250PSI max, SS and Viton, AC Tech VFD. 4-20mA remote input, 115 VAC, 6 Amps	$5,120.00
A-15000-130	0.133 to 13.3 GPH Sydex Progressive Cavity Pump, 250PSI max, SS and Viton, AC Tech VFD. 4-20mA remote input, 115 VAC, 6 Amps	$5,480.00
A-14676-V	0.05 to 1.0GPM Sydex progressive cavity feed pump, with AC Drive, 1PH 115 VAC input, 230VAC 3 phase 1/2 HP motor 1 Ports In/Out. 100psi.VITON Stator	$7,340.00
A-17954	0.25 to 5.0GPM Sydex progressive cavity feed pump, with AC Drive, 1PH 115 VAC input, 230VAC 3 phase 1/2 HP motor 1.25 Ports In/Out. VITON Stator 58 PSI Max	$7,280.00
A-18047	1-14 GPM Sydex progressive cavity feed pump, with AC Drive, 3PH 240VAC input, 230VAC 3 phase 3 HP motor 2" Flange Ports In/Out. VITON Stator	$11,760.00

WATSON MARLOW 0-32 GPH Qdos Peristaltic

qdos
Peristaltic Metering

The following Qdos peristaltic pumps have no check valves to plug. Unlike other peristaltic pumps, these pumps have sealed heads that reduce the potential for spills when the tube ultimately wears out and fails. The spill is contained in the head and the pump shuts off. The pump has the ability to run backwards at that time to empty the lines and then allow the entire head to be replaced. The pumps will not air lock and will pull a prime from a tank 30' below the pump. They can continuously feed at flow rates of approximately 0/001 to 32 US GPH. They are powered by 115 VAC and are Nema 4x rated. The pump head can be ordered so that it is mounted on the left or right side when looking at the display.

These pumps are available in many control varieties, two sizes, and two pump head materials. The most common pumps are listed below and have one of the following three control functions:

- M - Manual Control - This allows the user to control the flow locally at the pump feed continuously or by turning the power ON and OFF to the pump.
- U - Universal Control - This will accept a 4-20mA remote speed signal along with digital RUN/STOP inputs. Includes transistor level Run Status and Alarm Outputs.
- UR - Universal Control with Remote Relay - Same as Universal Control but adds a 24V Relay box to provide non-powered Run Status and Alarm Output contacts.

CC Designation and Pricing Chart is on the following page.

CC	CONTROL	HEAD POSITION	P/N	MAX GPH	MAX PSI	LIST PRICE	SPARE HEAD	LIST PRICE
C	M	L	WM.0M0.183L.GLA	5	100	$3,070.90	WM.0M3.1800.PFP	$393.76
C	M	R	WM.0M0.183L.GRA	5	100	$3,070.90	WM.0M3.1800.PFP	$393.76
C	U	L	WM.0M0.184L.GLA	5	100	$3,568.45	WM.0M3.1800.PFP	$393.76
C	U	R	WM.0M0.184L.GRA	5	100	$3,568.45	WM.0M3.1800.PFP	$393.76
C	M	L	WM.0M0.283L.GLA	8	60	$3,070.90	WM.0M3.2800.PFP	$329.56
C	M	R	WM.0M0.283L.GRA	8	60	$3,070.90	WM.0M3.2800.PFP	$329.56
C	U	L	WM.0M0.284L.GLA	8	60	$3,568.45	WM.0M3.2800.PFP	$329.56
C	U	R	WM.0M0.284L.GRA	8	60	$3,568.45	WM.0M3.2800.PFP	$329.56
P	M	L	WM.0M0.223L.GLA	8	100	$3,070.90	WM.0M3.2800.PFP	$329.56
P	M	R	WM.0M0.223L.GRA	8	100	$3,070.90	WM.0M3.2200.PFP	$329.56
P	U	L	WM.0M0.224L.GLA	8	100	$3,568.45	WM.0M3.2200.PFP	$329.56
P	U	R	WM.0M0.224L.GRA	8	100	$3,568.45	WM.0M3.2200.PFP	$329.56
P	U	L	WM.0M0.225L.GLA	8	100	$4,247.90	WM.0M3.2200.PFP	$329.56
P	U	R	WM.0M0.225L.GRA	16	100	$4,247.90	WM.0M3.2200.PFP	$329.56
P	UR	L	WM.0M0.224R.GLA	16	100	$3,926.90	WM.0M3.2200.PFP	$329.56
P	UR	R	WM.0M0.224R.GRA	16	100	$3,926.90	WM.0M3.2200.PFP	$329.56
P	M	L	WM.0M0.323L.GLA	32	100	$4,098.10	WM.0M3.2200.PFP	$329.56
P	M	R	WM.0M0.323L.GRA	32	100	$4,098.10	WM.0M3.2200.PFP	$329.56
P	M	L	WM.0M0.423L.GLA	32	60	$4,365.60	WM.0M3.4200.PFP	$422.65
P	U	L	WM.0M0.424L.GLA	32	60	$5,087.85	WM.0M3.4200.PFP	$422.65
P	U	R	WM.0M0.424L.GRA	320	60	$5,087.85	WM.0M3.4200.PFP	$422.65
P	UR	R	WM.0M0.424R.GRA	32	60	$5,489.10	WM.0M3.4200.PFP	$422.65

CC DESIGNATION

C – This option should be used for sodium hypochlorite (chlorine bleach), bromine, and hydrogen peroxide (up to 50%). The pump has the SEBS tubing head with PFPE lubricant. Maximum pressure for Qdos 20 pumps is 100 PSI, and maximum pressure for Qdos 30 pumps is 60 PSI.

P – This option will work with the majority of your chemicals with the exception of chlorine and bromine based products. The pump has the Santoprene tubing head with PFPE lubricant. Maximum pressure is 100 PSI.

Blue-White® ProSeries Pumps

Blue-White pumps are peristaltic pumps used in a wide variety of fluid applications. These pumps are self-priming, even against maximum line pressure. Therefore, bypass valves are not required. In addition, Blue-White pumps cannot vapor lock or lose prime. To avoid and reduce maintenance, the pumps are designed without valves that can clog. The pumps include a tube failure detection system that protects against chemical spills due to a worn out tube. The Blue-White pumps are available in multiple categories, which include the A-100N Series, A2 Series, A3 Series, and A4 Series.

A1 Series (.001 - 5.6 GPH, 100 PSI Max) • *A2 Series (0.2 - 19.3 GPH, 125 PSI Max)*
A3 Series (0.001 - 35.19 GPH, 125 PSI Max) • *A4 Series (0.01 - 158.5 GPH, 125 PSI Max)*

The Blue-White ProSeries pumps consist of the A1, A2, A3, and A4 series. These are peristaltic pumps designed for high pressure and high accuracy applications in which large outputs and feed rates are necessary. These pumps feature a variable speed DC motor with turndown ratios of 100:1 (A2 Series) or 2500:1 (A3 and A4 Series). ProSeries pumps offer manual pump speed control, a tube failure detection system, and are compatible with flow verification sensors. They are also available with basic controls (A2F, A3F, and A4F models) or deluxe controls (A2V, A3V, and A4V models). Both variations allow for a remote start and stop input, while only models with deluxe controls allow for 4-20mA, 0-10 VDC pulse inputs. In addition, all ProSeries pumps feature a user friendly digital touch pad and colored LCD display that can show the motor speed, input signal values, and service status.

For ProSeries pumps, tubing can come in Flex-A-Prene, Flex-A-Thane, and Flex-A-Chem materials. In addition, multiple connection types are available. Listed below are ProSeries pumps that use a 1/2” Male NPT fitting. However, ProSeries pumps can also have 3/8” OD x 1/4” ID tubing, a 1/2” hose barb, a 1/2” - 3/4” sanitary fitting, or quick disconnect valves as the connection type.

Within the following selection chart is a “CC” (Chemical Compatibility) column. This CC designation is provided to assist you with the selection of the proper pump tubing.

CC DESIGNATION
Flex-A-Prene: This tubing is best to use in most water treatment applications. It is resistant to 12.5% Sodium Hypochlorite, 50% Sulfuric Acid, 25% fluosilic acid, ferric chloride, and alum. Other chemicals include ammonium hydroxide, bleach, brine solutions, ethylene glycol, glucose, 33% hydrochloric acid, hydrogen peroxide, iodine, phosphoric acid, tannic acid, and others.
Flex-A-Chem: This tubing is best to use for applications involving acids, bases, salts, ketones, and alcohols. Chemicals include 40% ferrous chloride, 48% fluoboric acid, 25% fluosilic acid, 48% hydrofluoric acid, 71% nitric acid, 85% phosphoric acid, 70% potassium hypochlorite, 30% sodium phosphate, and 98% sulfuric acid.
Flex-A-Thane: This tubing is best to use for applications involving oil and water based polymers, sodium hypochlorite, alum, ferric chloride, fuels, and lubricants. Other chemicals include cyclohexane, fatty acids, heptane, hexane, kerosene, gasoline, lard, mineral spirits, soap solutions, and turpentine.

A1 Series (.001 - 5.6 GPH, 100 PSI Max)

P/N	MAX OUTPUT GPH	MAX PRESSURE PSI	OUTPUT CONTROL	PUMP TUBE MATERIAL (CC)	LIST PRICE
BW-A1B4-6T	1.35	100	Manual	Flex-A-Prene	$1,699.00
BW-A1C4-6T	1.35	100	Remote/Manual	Flex-A-Prene	$2,115.00
BW-A1B4-7T	4.17	50	Manual	Flex-A-Prene	$1,699.00
BW-A1C4-7T	4.17	50	Remote/Manual	Flex-A-Prene	$2,115.00
BW-A1B4-1T	1.09	65	Manual	Flex-A-Prene	$1,699.00
BW-A1C4-1T	1.09	65	Remote/Manual	Flex-A-Prene	$2,115.00
BW-A1N30F-3T	5.6	50	Manual	Flex-A-Thane	$1,237.95
BW-A1N30V-3T	5.6	50	Remote/Manual	Flex-A-Thane	$1,827.45
BW-A1N10F-8T	3.09	50	Manual	Flex-A-Chem	$1,237.95

A2 Series (0.02 to 19.3 GPH, 125 PSI Max)

P/N	MAX OUTPUT GPH	MAX PRESSURE PSI	CONTROLS	PUMP TUBE MATERIAL (CC)	LIST PRICE
BW-A2V24-MND	1.7	125	Deluxe	Flex-A-Prene	$3,659.25
BW-A2V24-MNEE	5.7	110	Deluxe	Flex-A-Prene	$3,659.25
BW-A2V24-MNGG	19.3	110	Deluxe	Flex-A-Prene	$3,659.25
BW-A2V24-MTH	14.3	50	Deluxe	Flex-A-Chem	$3,659.25
BW-A2V24-MGE	4	65	Deluxe	Flex-A-Thane	$3,659.25
BW-A2V24-MGG	9.3	65	Deluxe	Flex-A-Thane	$3,659.25
BW-A2V24-MG2G	14.98	65	Deluxe	Flex-A-Thane	$3,659.25

A3 Series (0.001 to 35.19 GPH, 125 PSI Max)

P/N	MAX OUTPUT GPH	MAX PRESSURE PSI	CONTROLS	PUMP TUBE MATERIAL (CC)	LIST PRICE
BW-A3V24-MNGG	22.3	110	Deluxe	Flex-A-Prene	$5,749.00
BW-A3V24-MNK	33.3	125	Deluxe	Flex-A-Prene	$5,749.00
BW-A3V24-MNKL	33.3	30	Deluxe	Flex-A-Prene	$5,749.00
BW-A3V24-MTK	35.19	50	Deluxe	Flex-A-Chem	$5,749.00
BW-A3V24-MGE	4.6	65	Deluxe	Flex-A-Thane	$5,749.00
BW-A3V24-MGH	24.9	65	Deluxe	Flex-A-Thane	$5,749.00
BW-A3V24-MGK	28.5	65	Deluxe	Flex-A-Thane	$5,749.00

A4 Series (0.01 to 158.5 GPH, 125 PSI Max)

P/N	MAX OUTPUT GPH	MAX PRESSURE PSI	CONTROLS	PUMP TUBE MATERIAL (CC)	LIST PRICE
BW-A4V24-MNH	28.5	125	Deluxe	Flex-A-Prene	$8,339.00
BW-A4V24-MNJ	44.4	100	Deluxe	Flex-A-Prene	$8,339.00
BW-A4V24-MNK	50.7	80	Deluxe	Flex-A-Prene	$8,339.00
BW-A4V24-MNHH	54	100	Deluxe	Flex-A-Prene	$8,339.00
BW-A4V24-MNL	100	50	Deluxe	Flex-A-Prene	$8,755.95
BW-A4V24-MNP	158.5	30	Deluxe	Flex-A-Prene	$8,339.00
BW-A4V24-MNKKL	123	30	Deluxe	Flex-A-Prene	$8,339.00
BW-A4V24-MTH	25.36	30	Deluxe	Flex-A-Chem	$8,339.00
BW-A4V24-MTK	54	30	Deluxe	Flex-A-Chem	$8,339.00
BW-A4V24-MGH	39.6	65	Deluxe	Flex-A-Thane	$9,289.19
BW-A4V24-MGKK	100	65	Deluxe	Flex-A-Thane	$8,339.00

IWAKI AIR Pumps

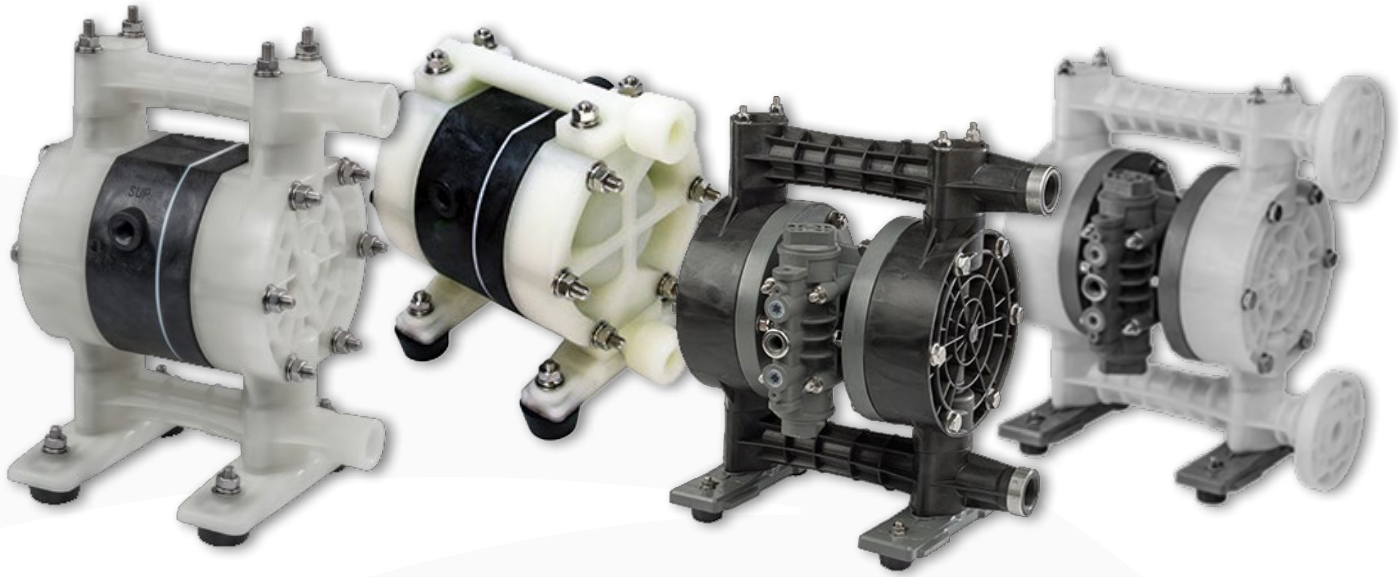

Iwaki Air AODD pumps are engineered for maximum utility. They are portable and easy to install, operate, and maintain. Infinitely variable flow rates and variable discharge pressures can handle a large range of fluids, including corrosive chemicals and flammable liquids. The AODD pumps can run dry, self-prime, and dead-head without damaging the pump.

Other design elements that distinguish Iwaki Air AODD pumps include body stabilization features to ensure heat resistance, and sound suppression construction to reduce both mechanical noise and compressed air noise. The lube-free air valve features a non-centering spring specially designed not to stall and is accessible for easy maintenance. Multiple material options are available, and the pumps can be configured to meet application requirements from 2 GPM to 190 GPM. The table lists the more common polypropylene/PTFE pumps that we typically sell.

P/N	MAX GPM	MAX PSI	LIST PRICE
TC-X050PT-NPT	3	100	$443.00
TC-X102PT-NPT	6.3	100	$559.00
TC-X151PT-NPT	13.2	100	$601.00
TC-X202PT-NPT	31.7	100	$1,019.00
TC-X252PT-NPT	43.6	100	$1,251.00

FLUX Pump Motors

The **FEM 4070** has a continuously variable speed for different flow rates and a capacity of500 watts. The ergonomic handle ensures a safe one-handed operation of the rotary switch to start the pump and the control knob for speed adjustment. It offers an optimal overload protection in all speed ranges and convinces with its compact design, low weight, and mainly by its low noise level.

The **F 458** is a compact commutator motor, has an extremely tough housing with double skin in aluminum and is thus very quiet. The motor is completely closed and has a special corrosion-resistant painting, so it is suitable for use in extreme conditions, even in areas with corrosive vapors.

P/N	DESCRIPTION	LIST PRICE
FP.FEM4070-120VODP	FEM 4070(120V, 60Hz, 1 pH) 407-01-012 , 4 speed ranges, 16’ of Cord, Open Drip Proof, .67 HP	$970.00
FP.F458-1 120VTEFC	Flux Pump Motor 120VAC TEFC, 700Watt	$1,840.50

Pump Tubes

The **F/FP 424** is ideal for transferring various low-viscosity, also aggressive media and is suitable for emptying drums and IBCs. It requires little maintenance—there is no seal or bearing wear. Due to the special design lubricants cannot contaminate the medium. A commutator motor, a compressed-air motor, or a brushless motor drives it. The pump is available in stainless steel, polypropylene, or polyvinylidene fluoride.

P/N	DESCRIPTION	LIST PRICE
FP.F424PT41/35z-39	Flux Pump Tube, 39 PP, Viton, for Hydrochloric Acid (all %), Sulfuric Acid (90% max), Nitric Acid (10%max), HF (40% max), High Head Version	$994.50
FP.F424PVDF41/35z-39	Flux Pump Tube, 39 PVDF, Viton, for Hydrochloric Acid (all %), Sulfuric Acid (90% max), Nitric Acid (10%max), HF (40% max)	$1,196.00

WALCHEM CONTROLLERS

Walchem controllers are offered in three different series that can be configured with the majority of Walchem's sensors. A brief overview of the controller line is as follows:

W100 With the W100 controller, Walchem offers an economical and reliable way to monitor or control a system that needs one sensor only. The controller is offered with three output relays of various types with an optional 4-20mA analog output.

Intuition-6 Walchem's newest controller. This can be configured to monitor a control system in multiple ways with one sensor, two sensors, one sensor and two 4-20mA inputs, or four 4-20mA inputs. There is also anew sensor/4-20mA combination board that allows you to have one or two sensors with one or two analog inputs. Programming is easily accomplished through its touch screen display. All W600 controller shave six output relays of various types with and optional dual 4-20mAanalog output. The controller can be configured with an Ethernet card so that it can be tied into a LAN and Walchem's V-Touch database, allowing it to generate remote reports and alarms. Finally, all W600 controllers have an internal data logging feature to allow the user to download information onto a thumb drive.

Intuition-9 Walchem's most flexible and powerful controller for your water treatment program. This controller integrates advanced sensing, instrumentation, fluid handling, and data communications technologies into one controller. The programming is easily accomplished through the touchscreen or via the LAN port from your computer. It has simple and intuitive pro-

gramming allowing you to easily configure it to control multiple cooling towers, boilers, closed loops, or virtually any water treatment process. It can be configured to accept up to a maximum of (8) sensors, (24) 4-20mA inputs, or (16) analog outputs using its (4) option slots and (7) available I/O module cards. It comes standard with an Ethernet port so that it can be tied into a LAN and Walchem's V-Touch database. This allows it to generate and send via e-mail daily summaries, data logs, and alarms. Using the V-Touch database, you can attach to the unit in real time from anywhere in the world if the unit is on a network. W900 controllers also have an internal data logging feature that allows the user to download information onto a thumb drive.

When you consider the many options available on the Walchem controllers, you have an almost infinite list of possible answers to your control questions. Listed on the following pages are some of the more common configurations:

Common Cooling Tower Controllers (No Panel)

GOOD W100- 1 SENSOR IN, UP TO 1 ANALOG OUTPUT		
P/N	DESCRIPTION	LIST PRICE
WCTW100PN-N	W100CT Controller, No Sensors, No Analog Output	$770.00
WCTW100PA-N	W100CT Controller, No Sensors, w/ Analog Output	$942.00
WCTW100PN-A	W100CT Controller with in-line conductivity probe, No AO	$953.00
WCTW100PA-A	W100CT Controller with in-line conductivity probe, W/ AO	$1,125.00

BETTER I6 - UP TO 4 SENSORS IN, UP TO 2 ANALOG OUT		
P/N	DESCRIPTION	LIST PRICE
I6W.0000000000ADW1	WCT6A00PABNN-NNNNN, 6 Pwd - Pigtails, USA, Power Cord 15A, 1SI, 2AI, No Hardware	$1,907.00
I6W.0000000005KIC1	WCT6A00PABNE-NNNNN, 6 Pwd - Pigtails, USA, Power Cord 15A, 1SI, 2AI, Ethernet, No Hardware	$2,289.00
I6W.0000000000FQE1	WCT6A00PBCNN-NNNNN, 6 Pwd - Pigtails, USA, Power Cord 15A, 1SI, 3AI, No Sensor	$2,289.00
I6W.0000000006RVQ1	WCT6A00PBCAE-NNNNN, 6 Pwd - Pigtails, USA, Power Cord 15A, 1SI, 3AI, Analog Out, Ethernet, No Sensors	$2,289.00

BEST I9 CONFIGURABLE WITH 4 INPUT CARDS - COMMON CONFIGURATIONS SHOWN BELOW		
P/N	DESCRIPTION	LIST PRICE
I9W.00000096FT9P02	WCT9A000PAADEDNN-NNNNNN, Fixed Rly - 8 Pwd - Pigtails, USA Power Cord 15A, 4SI, 8AI, 4AO, Ethernet/WiFi, No Hardware	$6,190.00

Common Cooling Tower Controllers (Panel Mounted)

GOOD W100		
P/N	DESCRIPTION	LIST PRICE
WCTW100PN-B	Bleed-and-Feed Cooling Tower Controller w/3 outputs (bleed, feed, bio), 120VAC prewired, graphite electrode & flow switch, panel mounted	$1,214.00
WCTW100PA-B	Bleed-and-Feed Cooling Tower Controller w/3 outputs (bleed, feed, bio), 120VAC prewired, graphite conductivity & flow switch, panel mounted, 1 isolated analog output	$1,386.00

BETTER I6		
P/N	DESCRIPTION	LIST PRICE
I6W.00000000XLF5G1	WCT6A00PANNE-PANNN, 6 Pwd - Pigtails, USA Power Cord 15A, 1SI, Ethernet, FS Manifold, LP, 1 Ccond	$2,507.00
I6W.0000002DFLPXG1	WCT6A00PAAAE-PAFNN, 6 Pwd - Pigtails, USA Power Cord 15A, 2SI, Analog Out, Ethernet, FS Manifold, LP, 1 CCond, 1 pH	$3,744.00

BEST I9		
P/N	DESCRIPTION	LIST PRICE
I9W.0TGCXQ31A62502	WCT9A000PACHNNNH-PAFPRN, 8 Pwd - Pigtails, USA Power Cord 15A, 2SI, 4AI, 2CI, 24VDC Aux, FS Manifold, LP, 1 CCond, 1 pH, 1 PTSA, 1 Dual Corr.	$10,555.00

COOLING TOWER PANELS

Atlantis cooling tower panels are built to meet the specific requirements of each application. From piping layout and sensor selection to coupon stations, chemical injection points, communications, and other accessories, nearly every aspect of the panel can be configured to fit your system.

For quick pricing and configuration reference, we offer the three standard panel levels shown below. Level 1, Level 2, and Level 3 represent common configurations ranging from basic monitoring and control to more complete cooling tower water management systems.

These configurations are only a starting point. Atlantis can provide virtually any combination of components and features to meet your application. Contact us for a custom quote and configuration tailored to your needs.

The controller and pumps must be ordered separately.

I6 Cooling Tower Panel - Easy Options

LEVEL 1 - I6 CONDUCTIVITY + PH ONLY OR I6 CONDUCTIVITY + ORP		
SELECTION	PART / CONFIGURATION NUMBER	QTY
ACT Panel Number	ACT-62NW-N7N-LLNNNN	1
Controller	I6W.00000000005MS1 (WCT6A00PAANN-NNNNN)	1
Conductivity Probe	W600-CT-IANNN	1
pH Probe	WEL-PHF-71	1
ACT Panel Number	ACT-62NW-N7N-LLNNNN	1
Controller	I6W.00000000005MS1 (WCT6A00PAANN-NNNNN)	1
Conductivity Probe	W600-CT-IANNN	1
ORP Probe	WEL-MVF-81	1

Level 1 Example Drawing

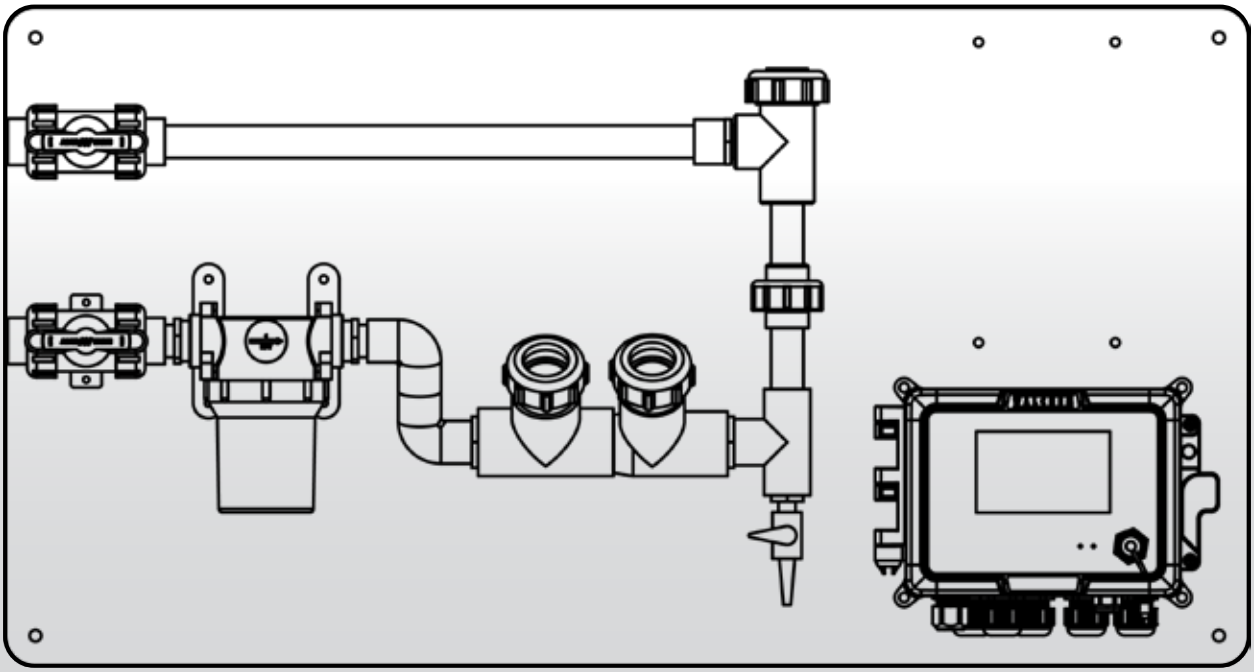

LEVEL 2 - I6 CCOND, PH, ORP, PTSA, CELL MODEM		
SELECTION	PART / CONFIGURATION NUMBER	QTY
ACT Panel Number	ACT-6CNW-N7N-LLNNSN	1
Controller	I6W.0000000000GBS1 (WCT6A00PCCNN-NNNNN)	1
Conductivity Probe	W600-CT-IANNN W600-CT-IANNN	1
ORP Probe	WEL-MVF-D1 WEL-MVF-D1	1
pH Probe	WEL-PHF-71 WEL-PHF-71	1
PTSA Probe	Pyxis-ST-500 Pyxis-ST-500	1
Cell Modem	A-14329-RE	1
Cell Modem	A-14329-250U	1

Level 2 Example Drawing

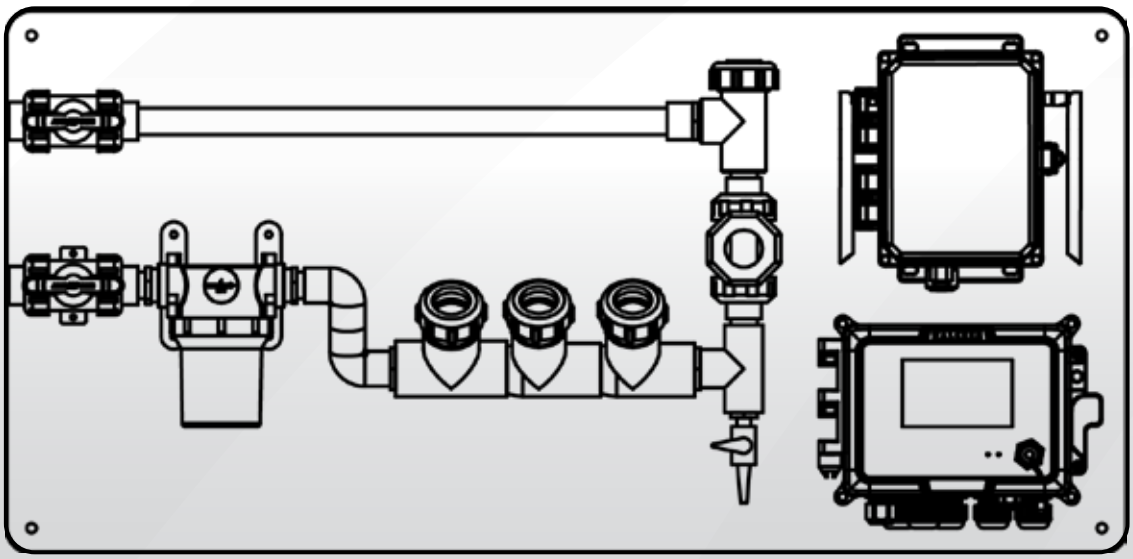

LEVEL 3 – I9 CCOND, PH, ORP, PTSA+TAGGED POLYMER, 4 COUPONS, 2 CORRATORS, 4 PUMP SHELF, 4 INJECTION POINTS, 3-WAY BLOWDOWN VALVE, CELL MODEM		
SELECTION	**PART / CONFIGURATION NUMBER**	**QTY**
ACT Panel Number	ACT-9CDW-27G-LL1DSB	1
Controller	I9W.00000003UA5NO2 (WCT90000PAADNNNN-NNNNNN)	1
Conductivity Probe	W600-CT-IANNN W600-CT-IANNN	1
pH Probe	WEL-PHF-71 WEL-PHF-71	1
ORP Probe	WEL-MVF-81 WEL-MVF-81	1
PTSA Probe	Pyxis-ST-588	1
Corrator	Pyxis-CR-300	1
Cell Modem	A-14329-RE	1
Cell Modem	A-14329-250U	1

Level 3 Example Drawing

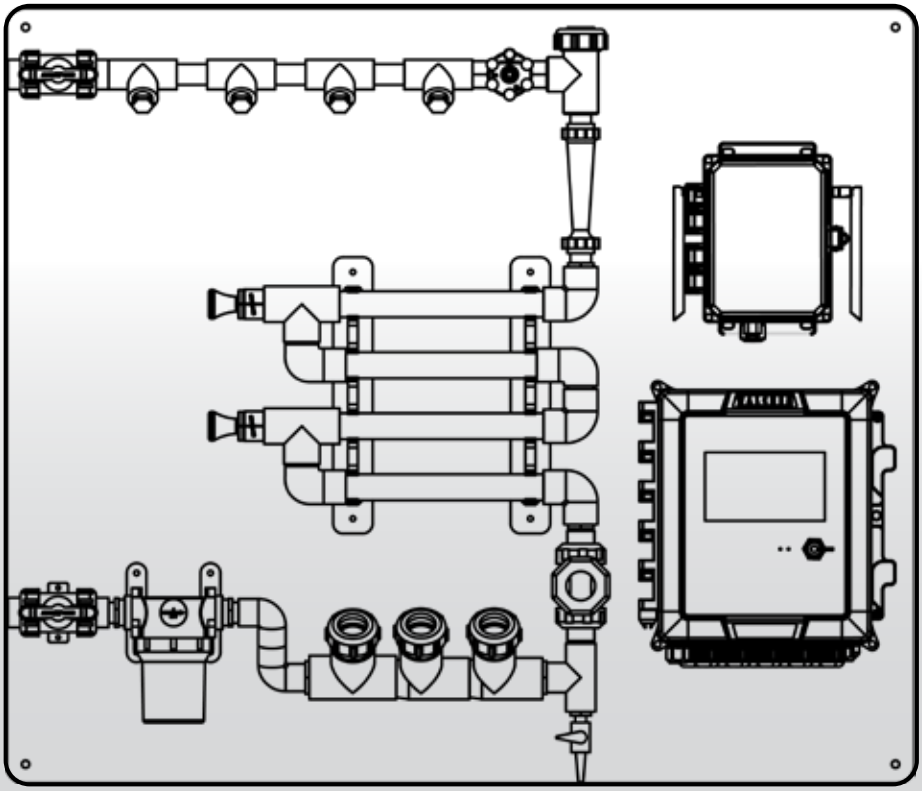

Cooling Tower Conductivity Probes

Standard cell constant 1.0 sensors are designed for cooling towers with water up to 30,000 µS/cm (range varies with solution temperature, see next page). Lower pressure (up to 150 PSI, 10 bar) polypropylene sensors are available with graphite or stainless steel electrodes, and may be installed inline or submersion. High pressure (up to 300 PSI, 20 bar) inline sensors are constructed from stainless steel and PEEK. Performance specifications of the sensors will vary with the specific controller, and the controller manual and brochure should be referenced for detail. All conductivity sensors are sensitive to temperature changes. Typical cooling tower temperatures are 32-140°F (0-60°C).

P/N	DESCRIPTION	LIST PRICE
191646-03	Sensor, Contacting Conductivity, Tower, PP/Graphite, 0-30 mS, 150 PSI, 3 ft. cable	$183.00
191646-20	Sensor, Contacting Conductivity, Tower, PP/Graphite, 0-30 mS, 150 PSI, 20 ft. cable	$183.00
191693-10	Sensor, Contacting Conductivity, Tower, High Pressure, 316SS/PEEK, 0-30 mS, 300 PSI, 10 ft. cable	$768.00
191647-03	Sensor, Contacting Conductivity, Tower, PP/SS, 0-30 mS, 150 PSI, 3 ft. cable	$183.00
191647-20	Sensor, Contacting Conductivity, Tower, PP/SS, 0-30 mS, 150 PSI, 20 ft. cable	$183.00
191818-03	Sensor, Contacting Conductivity, Tower, PP/Graphite, 4-20mA Transmitter, 0-1 mS, 150 PSI, 3 ft. cable	$595.00
191818-20	Sensor, Contacting Conductivity, Tower, PP/Graphite, 4-20mA Transmitter, 0-1 mS, 150 PSI, 20 ft. cable	$595.00
191819-03	Sensor, Contacting Conductivity, Tower, PP/Graphite, 4-20mA Transmitter, 0-10 mS, 150 PSI, 3 ft. cable	$595.00
191819-20	Sensor, Contacting Conductivity, Tower, PP/Graphite, 4-20mA Transmitter, 0-10 mS, 150 PSI, 20 ft. cable	$595.00

BOILER PANELS

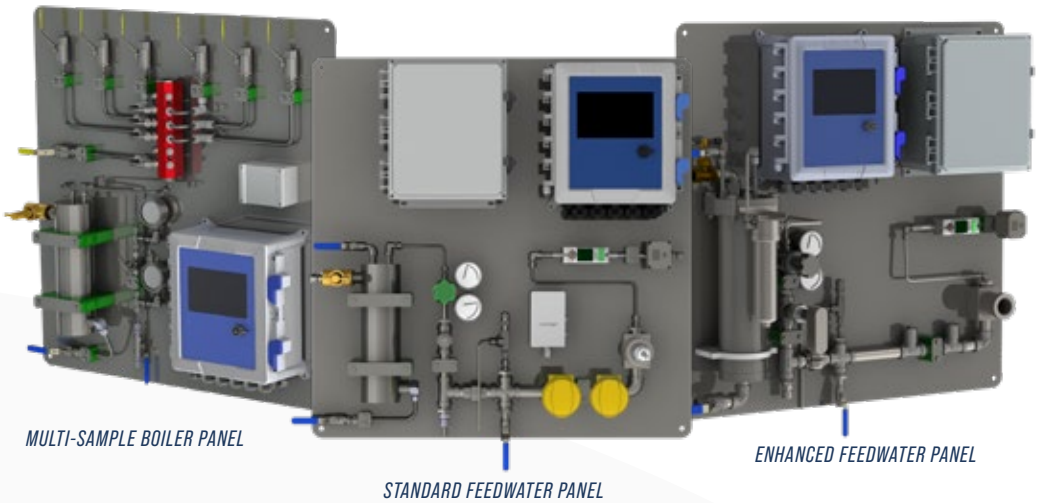

Atlantis boiler panels bring sample conditioning, water quality monitoring, and control together in one integrated system. Options support feedwater and boiler water applications, with cellular connectivity available for remote monitoring. Select from the configurations below or contact Atlantis for help matching a panel to your system's requirements.

Boiler Feedwater Panels

P/N	DESCRIPTION	LIST PRICE
A-20151	Standard Feedwater Panel + pH + Pyxis ST-525SS-T	$26,120.00
A-20137	Standard Feedwater Panel + pH + ORP + Pyxis ST-525SS-T	$27,940.00
A-20437	Standard Feedwater Panel + pH + ORP + Pyxis ST-525SS-T + Mod w/ W100 for 4th Boiler	$29,220.00
A-20543	Standard Feedwater panel + pH + Pyxis ST-525SS-T + Pyxis DO	$30,980.00
A-20959	Standard Feedwater Panel + pH + ORP + Pyxis ST-525SS-T + Pyxis DO	$32,280.00
A-20484	Standard Feedwater Panel + Pyxis ST-525SS-T + Pyxis DO + Pyxis Sulfite/pH	$33,200.00

BOILER FEEDWATER PANELS - CONTINUED FROM PREVIOUS PAGE		
P/N	DESCRIPTION	LIST PRICE
A-21053	Standard+ Feedwater Panel w/ Standard Cooler and United Filtration Strainer + Pyxis ST-525SS-T + Pyxis DO + Pyxis Sulfite/pH	$35,120.00
A-19752	Standard+ Feedwater Panel w/ Sentry FXR Cooler and Standard Strainer + pH + Pyxis ST-525SS-T	$33,000.00
A-21229	Enhanced Feedwater Panel w/ Sentry FXR Cooler and United Filtration Strainer + Pyxis ST-525SS-T	$33,100.00
A-21080	Enhanced Feedwater Panel w/ Sentry FXR Cooler and United Filtration Strainer + pH + ORP + Pyxis ST-525SS-T	$37,260.00

Boiler Water Panels

P/N	DESCRIPTION	LIST PRICE
A-20247	Enhanced Boiler Water Panel w/ Sentry FXR Cooler and United Filtration Strainer + pH + Pyxis ST-525SS-HR-T	$35,080.00

Other Boiler Panels

P/N	DESCRIPTION	LIST PRICE
A-20632	Multi-Sample Boiler Panel	$10,080.00

Accessories

P/N	DESCRIPTION	LIST PRICE
A-18040-SS	Boiler Panel Stand	$1,850.00

BOILER CONTROLLERS

W100 Boiler Controllers

W100 series controllers can be used as a simple, inexpensive blowdown controller, with two additional outputs that can be used for alarms or chemical feed based on blowdown, a meter input, or percent time. They can be purchased either with the power prewired or hardwired and can include an optional 4-20mA output. Below are the most common systems that we sell.

P/N	DESCRIPTION	LIST PRICE
WBLW100HN-A	Boiler Controller, Hardwired, Three relay outputs, Boiler sensor includes temperature element for Automatic Temperature Compensation, 250PSI, 20' cable, does not have 4-20mA output option.	$1,356.00
WBLW100PN-A	Boiler Controller, 115 VAC prewired, Three relay outputs, Boiler sensor includes temperature element for Automatic Temperature Compensation, 250PSI, 20' cable, does not have 4-20mA output option.	$1,413.00
WBLW100HN-B	Boiler Controller, Hardwired, Three relay outputs, Boiler sensor without Automatic Temperature Compensation, 250PSI, 20' cable, does not have 4-20mA output option.	$1,216.00

Boiler Conductivity Probes

Versatile cell constant 1.0 sensors are designed for boilers with water up to 30,000 µS cm (range varies with solution temperature) and pressures up to 250 PSI (16.7 bar). These inline sensors are constructed from stainless steel and PEEK providing for operation in temperatures up to 401°F (205°C). A cell constant 10.0 sensor is available designed for boilers with water up to 300,000 µS/cm (range varies with solution temperature). Performance specifications of the sensors will vary with the specific controller, and the controller manual and brochure should be referenced for detail. All conductivity sensors are sensitive to temperature changes. Walchem offers models with and without automatic temperature compensation (ATC). Typical boiler temperatures are 32-401°F (0-205°C).

P/N	DESCRIPTION	LIST PRICE
191694	Sensor, Contacting Conductivity, Boiler, ATC, 316SS/PEEK, 0-30 mS, 250 PSI, 401F	$440.00
190762	Sensor, Contacting Conductivity, Boiler, ATC, w/J-Box,316SS/PEEK, 0-30 mS, 250 PSI, 401F	$589.00
191695	Sensor, Contacting Conductivity, Boiler, No ATC, 316SS/PEEK, 0-30 mS, 250 PSI, 401F	$288.00
190762-NT	Sensor, Contacting Conductivity, Boiler, No ATC, w/J-Box, 316SS/PEEK, 0-30 mS, 250 PSI, 401F	$450.00
191696	Sensor, Contacting Conductivity, Boiler, ATC, 316SS/PEEK, 0-300 mS, 250 PSI, 401F	$657.00
191089	Sensor, Contacting Conductivity, Boiler, ATC, w/J-Box, 316SS/PEEK, 0-300 mS, 250 PSI, 401F	*Pricing on Request
103976	Sensor, Contacting Conductivity, Boiler, High Temp/Pressure ATC, 316SS/PEEK, 0-30 mS, 600 PSI, 486F	*Pricing on Request

CONDUCTIVITY PROBES

General Probes

These passive sensors are available in a variety of cell constants for use in conductivities up to 300,000 µS/cm (range varies with solution temperature). Typical applications include RO systems and boiler condensate monitoring. They may be mounted inline or submersion, using ½" NPT mounting fittings in either polypropylene (32-212°F/0-100°C, 100 PSI/6.9 bar) or stainless steel (32-248°F/0-120°C, 200 PSI/13.8 bar). These inline sensors are constructed from stainless steel and PTFE with EPR o-rings.

P/N	DESCRIPTION	LIST PRICE
103903-10	Sensor, Contacting Conductivity, 316SS/PTFE, 0-0.3 mS, 10 ft. cable, No Gland*	$472.00
103905-10	Sensor, Contacting Conductivity, 316SS/PTFE, 0-30 mS, 10 ft. cable, No Gland*	$387.00
103906-10	Sensor, Contacting Conductivity, 316SS/PTFE, 0-300 mS, 10 ft. cable, No Gland*	$555.00

Condensate / General Conductivity Probes

P/N	DESCRIPTION	LIST PRICE
103904-10	Sensor, Contacting Conductivity, 316SS/PTFE, 0-3 mS, 20 ft. cable, No Gland*	$430.00
*Note: Mounting gland must be ordered separately: P/N 191669 (SS, 200 PSI) Or P/N 103907 (PP, 100 PSI)		

Electrodeless Conductivity Probes

Walchem electrodeless conductivity sensors use encapsulated, non-contacting toroidal technology to deliver accurate readings even in the harshest chemical control environments — oily cleaner baths, chromates, rinse tanks, fume scrubbers, and other concentrated chemicals up to a conductivity of 1000 mS/cm. Unlike direct contacting sensors, the toroidal design is immune to thin coatings, contamination, and calibration drift. Each sensor is matched to a specific conductivity range for reliable, precise detection.

P/N	DESCRIPTION	LIST PRICE
191638-03	Sensor, Electrodeless Conductivity, CPVC, 500 uS - 2000 mS, 20-180 F, 3 ft. cable*	$425.00
191638-20	Sensor, Electrodeless Conductivity, CPVC, 500 uS - 2000 mS, 20-180 F, 20 ft. cable*	$425.00
191639-03	Sensor, Electrodeless Conductivity, PEEK, 500 uS - 2000 mS, 140 PSI, 20-190 F, 3 ft. cable*	$1,216.00
191639-20	Sensor, Electrodeless Conductivity, PEEK, 500 uS - 2000 mS, 140 PSI, 20-190 F, 20 ft. cable*	$1,216.00
104482-20	Sensor, Electrodeless Conductivity, GFRPP, 500 uS - 2000 mS, 100 PSI, 23-212 F, 20 ft. cable*	$1,219.00
*Note: Electrodeless conductivity sensors cannot be used with the combination sensor/analog input card on INT/W600 controllers. A dedicated sensor input card is required.		

PH/ORP CONTROLLERS

W100 Controllers

W100 series controllers can be used as simple and inexpensive pH or ORP monitors and/or controllers. They have three programmable outputs that can be used for alarms or chemical feed based on the pH or ORP. The outputs can be configured as three powered relays, three non-powered relays (dry contact), or two pulse proportion TTL outputs with one dry relay output. They can be purchased either with the power prewired or hardwired and can include an optional 4-20mA output. Listed below are the most common systems that we sell.

P/N	DESCRIPTION	LIST PRICE
WPHPW100PA-N	W100W pH/ORP Controller | 3 pwd, Prewired USA, pigtails | 1 Analog Out | No sensor	$942.00
WPHPW100PA-C	W100W pH/ORP Controller | 3 pwd, Prewired USA, pigtails | 1 Analog Out | pH, Submersion, flat surface, with ATC, 20' cable	$1,555.00
WPHPW100PN-D	W100W pH/ORP Controller | 3 pwd, Prewired USA, pigtails | No Analog Out | pH, inline tee, flat surface, no ATC, 20' cable	$1,412.00
WPHPW100PN-F	W100W pH/ORP Controller | 3 pwd, Prewired USA, pigtails | No Analog Out | pH, flat surface, w/ ATC, w/ FS manifold, 3' cable prewired	$1,837.00
WPHPW100HA-C	W100W pH/ORP Controller | 3 pwd, Hardwired | 1 Analog Out | pH, Submersion, flat surface, with ATC, 20' cable	$1,498.00
WPHPW100PA-G	W100W pH/ORP Controller | 3 pwd, Prewired USA, pigtails | 1 Analog Out | ORP, Submersion, flat surface, 20' cable	$1,528.00
WPHPW100PA-J	W100W pH/ORP Controller | 3 pwd, Prewired USA, pigtails | 1 Analog Out | ORP, flat surface, with FS manifold, 3' cable prewired	$1,982.00

I6 pH/ORP Controllers

Intuition-6 series controllers can be can be configured to be monitors or control systems in multiple ways with single or dual pH/ORP probes. The controller can have various combinations of six output relays that can be either 115 VAC powered, dry/non-powered contacts, or optically coupled TTL outputs. Other options include a dual 4-20mA output card and an Ethernet card. The controller can be ordered pre-wired or hardwired and mounted on a panel with a flow manifold and flow switch. All controllers have internal data logging and can generate historic graphs on the front screen. Listed below is a price matrix covering the options for the most common controllers purchased. ***The controllers can be purchased with flow switch sensor manifolds, but all sensors must be ordered separately and are listed in the matrix just below this section.***

INTUITION-6 WPH GENERAL INDUSTRIAL CONTROLLER SAMPLE MODEL CODE: WPH6 100 P AC A E - P B D N N		
PART # / CODE	**DESCRIPTION**	**PRICE (ADDER)**
WPH6	General Industrial Controller – BASE	$1,122.00
Relays/Wiring		
000	6 powered relays	$0.00
100	2 powered 4 dry relays	$0.00
200	2 opto 4 dry relays	$44.00
400	4 opto 2 dry relays	$86.00
A00	6 powered relays with USA pigtails prewired	$171.00
B00	2 powered relays with USA pigtails prewired, 4 dry relays	$57.00
C00	2 opto relays with 20ft. pulse cables, 4 dry relays	$68.00
D00	4 opto relays with 20ft. pulse cables, 2 dry relays	$134.00
Power Cord		
B	Brazil power cord	$46.00
D	DIN power cord	$48.00
H	Hardwired - No power cord	$0.00
P	USA power cord	$28.00
Input boards #1 and 2 (must be in alphabetical order)		
A	One sensor input board	$279.00
B	One dual analog input board	$307.00
C	One combination sensor/analog input board	$421.00
N	No sensor Input boards	$0.00
Analog Outputs		
N	No Analog Outputs	$0.00
A	One dual isolated analog output board	$315.00
Ethernet/Communications Protocol		
N	No Ethernet	$0.00
E	Ethernet board	$382.00
M	Ethernet board with Modbus TCP + BACnet	$738.00

INTUITION-6 WPH GENERAL INDUSTRIAL CONTROLLER CONFIGURATION MATRIX - CONTINUED FROM PREVIOUS PAGE		
PART # / CODE	DESCRIPTION	PRICE (ADDER)
Sensor Mounting		
N	No Flow Switch, No mounting hardware, No sensors	$0.00
S	No Flow Switch, Submersion Sensors, 20foot cables	$0.00
I	No Flow Switch, Inline Sensors, 20foot cables	$97.00
L	Loose Flow Switch Manifold, 20foot cables, Low Pressure	$300.00
P	Flow Switch Manifold on Panel, 3 foot cables, Low Pressure	$454.00
F	Loose Flow Switch Manifold, 4 foot cable, High Pressure	$960.00
H	Flow Switch Manifold on Panel, 4 foot cables, High Pressure	$1,072.00
Sensor #1 through Sensor #4 (Must be in alphabetical order, with suitable input board selected above, except N last)		
A	External pH/ORP Preamplifier, no sensor*	$330.00
B	Flat surface WEL pH, With Pt1000ATC	$613.00
C	Flat surface WEL pH, No ATC	$546.00
D	Rod Style WEL ORP	$635.00
E	Flat surface WEL ORP	$586.00
F	Flat surface WEL pH, 4-20mA^	$741.00
G	Rod Style WEL ORP, 4-20mA^	$830.00
H	Flat surface WEL ORP, 4-20mA^	$782.00
N	No Sensor	$0.00
X	Dual Tee low pressure manifold (No Sensors)**	$388.00
*Order 102029 or 102963 electrodes separately. These sensors are allowed with high pressure manifolds		
**Order WEL electrode(s) and Preamplifier housing(s) separately, for L or P mounting style only		
^ Requires a sensor board with an analog input		

Walchem WEL Series pH Sensors

Walchem WEL Series pH electrode kits provide a complete differential pH measurement solution for industrial water treatment applications. Each kit includes a rugged CPVC housing with replaceable pH cartridge, offering reliable performance, simple installation, and quick, tool-free cartridge replacement. The modular design reduces maintenance costs by allowing the housing electronics to be reused while replacing only the sensing element.

A titanium-solution ground rod integral to the housing enables the differential measuring technique. This results in prolonged electrode life and reliable measurement, as well as resistance to stray voltages, currents, or ground loop problems.

All probes include a threaded end for submersible mounting and can include a 3/4” for in-line installations.

P/N	DESCRIPTION	LIST PRICE
WEL-PHF-71	Submersion mount (no tee) with ATC (automatic temperature compensation) standard probe output – Includes housing and probe cartridge	$614.00
WEL-PHF-72	In line with ATC standard output Includes housing, mounting tee, and probe cartridge	$711.00
WEL-PHF-81	Submersion mount W/O ATC standard output Includes housing and probe cartridge	$546.00
WEL-PHF-82	In line W/O ATC standard output Includes housing, mounting tee, and probe cartridge	$643.00
WEL-PHF-C1	Submersion mount- integrated ATC pH 4-20mA output Includes housing and probe cartridge	$741.00
WEL-PHF-C2	In line integrated ATC pH 4-20mA output. Includes housing, mounting tee, and probe cartridge	$838.00
WEL-PHF-32	BNC NO PREAMP- can be used with generic or Walchem controllers with a BNC connector or external preamp	$623.00

Walchem Replacement pH Probe Cartridges Only

Restore pH measurement performance without replacing the entire sensor assembly. Walchem WEL replacement pH cartridges install in minutes without tools and feature a secure threaded interlock with double O-ring seal for dependable, leak-free operation. Multiple cartridge styles are available to suit a wide variety of industrial water treatment applications.

P/N	DESCRIPTION	LIST PRICE
WEL-PHF-NN	Standard replacement probe cartridge	$218.00
WEL-PHH-NN	Hydrofluoric Acid Resistant Replacement pH Cartridge (also works better in cold water)	$258.00

Complete ORP Sensors

Walchem WEL Series ORP electrode kits combine a durable CPVC housing with a replaceable differential ORP cartridge to provide dependable oxidation-reduction potential monitoring in industrial water treatment systems. Designed for easy installation and long service life, the modular construction allows fast cartridge replacement while retaining the housing electronics, minimizing downtime and maintenance costs.

P/N	DESCRIPTION	LIST PRICE
WEL-MVF-82	ORP Electrode, CPVC preamplifier housing with 20’ cable, In-Line mounting (3/4 Tee) - W100/W600/W900	$683.00
WEL-MVF-D2	Flat surface ORP probe with 4-20mA output, 20’ cable w/ tinned leads, 3/4 in-line mounting, CPVC housing	$878.00
WEL-MVF-81	Flat surface ORP probe with 4-20mA output, 20’ cable w/ tinned leads, Submersion mounting, CPVC housing	$586.00
WEL-MVF-D1	Flat surface ORP probe with 4-20mA output, 20’ cable w/ tinned leads, Submersion mounting, CPVC housing	$781.00
WEL-MVF-NN	ORP electrode cartridge for WEL probe, flat surface	$258.00

Walchem Replacement pH & ORP Sensor Housings

Extend the service life of your Walchem WEL Series pH and ORP sensors with replacement housings designed for use with WEL replaceable electrode cartridges. Each rugged CPVC housing contains the differential preamplifier electronics and integral titanium solution ground required for reliable measurement in demanding industrial water treatment applications.

Replacement housings allow damaged or worn sensor assemblies to be restored without purchasing a complete new electrode kit. Designed for universal mounting and quick cartridge installation, WEL housings provide a cost-effective foundation for both pH and ORP measurement while helping resist electrical noise, stray voltages, and ground loop interference.

P/N	DESCRIPTION	LIST PRICE
191653-20	Housing w/ ATC for Walchem Controllers	$396.00
191652-20	Housing w/o ATC for Walchem Controllers	$329.00
191988-20	4-20mA ORP Housing	$523.00
191989-20	4-20mA pH Housing	$523.00
191949	Non-Amplified BNC Connector for use with BNC connector probes	$253.00

WDS Differential pH/ORP

These sensors are designed to perform in applications where other electrodes fail. They offer reliable and long-lasting performance in various challenging municipal and industrial applications. They can transmit signal up to 3,000 feet.

P/N	DESCRIPTION	LIST PRICE
A-16243	WDS Differential Salt Bridge Style pH Probe with Connector – 1.25” mount	$1,115.00

High Temperature and Pressure pH/ORP Electrodes

These pH ORP electrodes are designed to function in challenging environments, where other pH ORP sensors fail. They can handle pressure up to 500 psi at room temperature and temperatures up to 275°F (135°C) in low-pressure installations.

P/N	DESCRIPTION	LIST PRICE
191204	High Temp pH with mounting and 10’ of cable	$1,023.00
102029	High temp insertion style Walchem (must order mounting gland separately)	$536.00
102963	Electrode, ORP, high pressure, High Temp, 10ft. cable, Use gland 102028	$681.00
102028	Gland, SS, High Temp/In-line (pH/ORP), Uses 1/2 x 3/4 Red Bushing and (191669) fitting	$352.00

GF Signet pH Probes

Designed for accurate pH measurement in ultra-pure and low-conductivity water applications, this GF Signet package combines the 3-2751-2 Smart Sensor Electronics with the 3-2726-LC-00 Low Conductivity pH electrode. Engineered specifically for boiler feedwater, condensate, and demineralized water systems, it delivers stable, reliable pH measurements where conventional probes often struggle. The 2751 transmitter features EasyCal field calibration, sensor diagnostics, and a 4-20 mA output for seamless integration with PLC and DCS control systems.

P/N	DESCRIPTION	LIST PRICE
SIG-3-2751-2	Series 2750Signet Preamp (must buy sensor separately)	$808.00
SIG-3-2726-LC-00	Bulb pH for Low Conductivity Water PT1000NPT (must buy preamp separately)	$528.00

GF Signet ORP Probes

The GF Signet 3-2751-2 Smart Sensor Electronics paired with the 3-2725-60 ORP electrode provides reliable oxidation-reduction potential (ORP) monitoring for a wide range of industrial water treatment applications. Featuring a rugged Ryton® sensor body, patented DryLoc® connector, and durable platinum flat sensing element, this combination delivers long service life, easy installation, and dependable performance in cooling towers, wastewater, process water, and general chemical treatment systems. The 2751 transmitter provides EasyCal field calibration, sensor diagnostics, and a 4-20 mA output for seamless integration with PLC and DCS control systems..

P/N	DESCRIPTION	LIST PRICE
SIG-3-2751-2	Series 2750Signet Preamp	$808.00
SIG-3-2725-60	ORP Electrode Flat	$573.68

Controller Accessories

Cellular Modems

Our newest cellular modem has been specifically designed for the industrial water treatment industry. Dual cellular antennas and multi-carrier SIMs allowing for worldwide connectivity offer more reliability and flexibility than ever. Our new SIM cards allow these modems to connect in over 200 countries! Connect up to four controllers to one modem and start receiving alarms, summaries, and data logs from anywhere with cellular access.

Standard Specifications

- NEMA 4X Industrial Enclosure
- Quad Ethernet Switch
- 120V Power Cord
- High Quality Customer Service

Optional Accessories

- Omni-directional
- Multi-band Antennas
- International Configuration
- Private Labeling

MODEM LIST PRICING				
A-14329-RE	USA & International Multi-SIM Version			$920.00
DATA PLANS LIST PRICING				
	Yearly Cost by Carrier			
Monthly Data Allowance	USA Multi-SIM		International Multi-SIM	
250MB	A-14329-250U	484.62	A-14329-250I	$646.15
500MB	A-14329-500U	553.85	A-14329-500I	$1,038.46
1GB	A-14329-1GU	692.31	A-14329-1GI	$1,938.46
5GB	A-14329-5GU	1938.46	-	-
*Our average customer uses less than 200MB/mo for their Walchem controllers.				

Wireless Access Point

If your installation location has access to a wireless network, this unit can be used to attach all W900 systems via their standard LAN port to the available network. It can also be used with any W600 controller that has the optional LAN port installed.

P/N	DESCRIPTION	LIST PRICE
A-14854 Rev A	Wireless Access Point in NEMA 4X box with internal antenna. 115 VAC	$480.00

KEYENCE CLAMP-ON FLOW SENSORS

KEYENCE has developed various clamp-on type flow sensor/meters to enable stable flow rate measurement with no pipe modification. These devices can be used on small tubes to large pipes. The lineup also includes electromagnetic and Coriolis flow sensors as well as environmental resistant and sanitary types.

FD-Q Series

P/N	DESCRIPTION	LIST PRICE
FD-Q10C	1/4” - 3/8” Metal/Resin Pipe	$1,412.50
FD-Q20C	1/2” - 3/4” Metal/Resin Pipe	$1,369.53
FD-Q32C	1” - 1 1/4” Metal/Resin Pipe	$1,437.50
FD-Q50C	1 1/2” - 2” Metal/Resin Pipe	$1,625.00

FD-Q10C

FD-Q20C

FD-Q32C

FD-Q50C

FD-R Series

P/N	DESCRIPTION	LIST PRICE
FD-R50	1 1/2” - 2” Metal/Resin Pipe	$2,760.00
FD-R80	2 1/2” - 3” Metal/Resin Pipe	$4,841.00
FD-R125	4” - 5” Metal/Resin Pipe	$5,803.10
FD-R200	6” - 8” Metal/Resin Pipe	$6,250.00

FD-R50

FD-R80

FD-R125

FD-R200

FD-X Series

P/N	DESCRIPTION	LIST PRICE
FD-XS8	.24” Pipe: 0- 3000mL/min .31” 0-8000mL/min	$1,625.00
FD-XS20	.375” - .41” Pipe: 15 L/min .47” - .54” Pipe: 0-20L/min	$1,615.93

FD-XS20 FD-XS8

Keyence Flowmeter Ordering Checklist

Choose a Keyence:

☐FD-X - Multiple Options
☐FD-Q10C - 1/4” - 1/8”
☐FD-Q20C - 1/2” - 3/4”
☐FD-Q32C - 1” - 1 1/4”
☐FD-Q50C - 1 1/2” - 2”
☐FD-R50 - 1 1/2” - 2”
☐FD-R80 - 2 1/2” - 3”
☐FD-R125 - 4” - 5”
☐FD-R200 - 6” - 8”

Choose a Power Supply:

☐A-15600-PS - Single Power Supply

Choose a Wiring Package:

☐A-15600-PSW-K - 6’ Cable for Keyence Wiring Only
☐A-15600-PSW-K-16 - 16’ Cable for Keyence Wiring Only
☐A-15600-PSW-KW - 6’ Cables for Keyence and EWN 4-20mA & Start/Stop Wiring
☐A-15600-PSW-KW-16 - 16’ Cables for Keyence and EWN 4-20mA & Start/

POLYMER MAKEDOWN SYSTEM
A-15600

The *Atlantis Technologies* Polymer Makedown System is a compact polymer feed system that can be constructed in various pump configurations including 2.3, 4.0, and 8.0 GPH.

The system is contained within a custom-built HDPE stand and is fully assembled and tested at our manufacturing facility.

- Requires 115 VAC 15 Amp Supply (power cord not illustrated)
- PVC piping, Viton elastomers, & HDPE stand
- Polymer inlet must be gravity fed with adequate line size for polymer to flow
- Viscosity should not exceed 10,000 cps
- Max water flow is 20 GPM

P/N	DESCRIPTION	LIST PRICE
A-15600-WPN-024	2.4 GPH Walchem EWP-R Neat Polymer Pump, Keyence Water Meter/Flow Switch, Atlantis Adjustable Polymer Eductor, Proportional Feed with Low Water Polymer Shutoff	$4,920.00
A-15600-WPN-040	4.0 GPH Walchem Neat Polymer Pump, Keyence Water Meter/ Flow Switch, Atlantis Adjustable Polymer Eductor, Proportional Feed with Low Water Polymer Shutoff.	$5,760.00
A-15600-WPN-080	8.0 GPH Walchem Neat Polymer Pump, Keyence Water Meter/ Flow Switch, Atlantis Adjustable Polymer Eductor, Proportional Feed with Low Water Polymer Shutoff.	$5,800.00

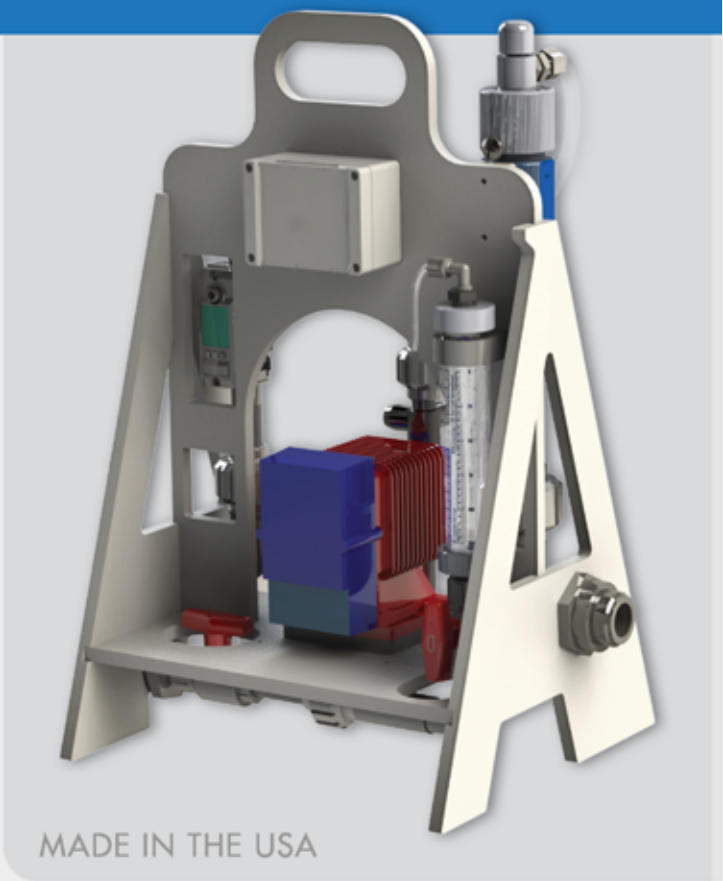

SPECIFICATIONS (NOT TO SCALE)

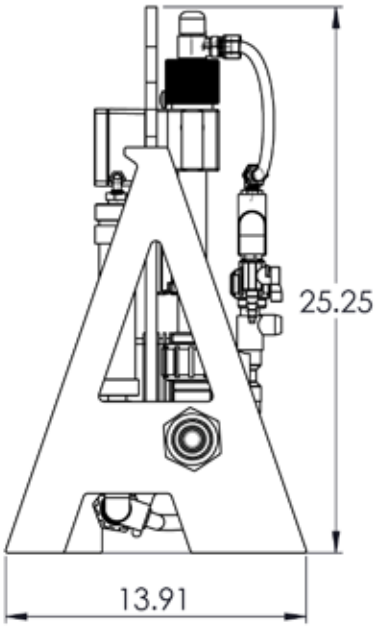

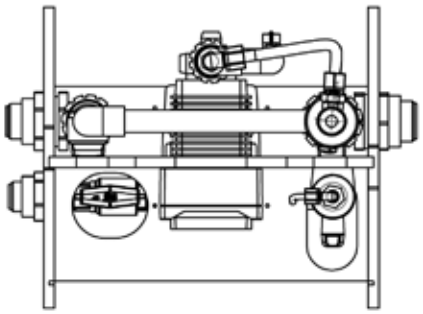

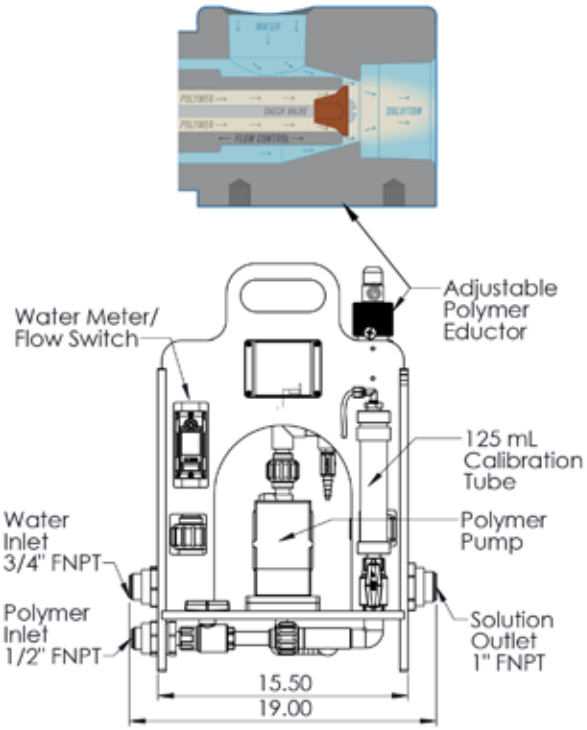

PROGRESSIVE CAVITY POLYMER MAKEDOWN SYSTEM

A-15400-XXX-PXXX

The *Atlantis Technologies* **A-15400-XXX-PXXX Progressive Cavity Polymer Makedown System** is a compact polymer feed system that can be constructed in multiple configurations to allow for varying capacities with a **Sydex progressive cavity pump.**

- Automatic Low Water Polymer Shutdown
- Proportional Polymer Feed to Water or External Input
- Digital Keyence Doppler Water Flow Meter/ Switch
- Adjustable Polymer Eductor for maximum mixing energy with no moving parts
- All in one unit for simple installation and use
- Requires 115 VAC 15 Amp Supply (power cord not illustrated)
- PVC piping, Viton elastomers, & HDPE stand
- Polymer inlet must be gravity fed with adequate line size for polymer to flow
- Viscosity should not exceed 10,000 cps

P/N	DESCRIPTION	LIST PRICE
A-15400-PNN-006	0.015 to 0.6 GPH Neat Polymer feed rate into 0.35 to 10GPM of water	$11,130.00
A-15400-PNN-060	0.015 to 6.5 GPH Neat Polymer feed rate into 0.35 to 10GPM of water	$10,700.00
A-15400-PNN-120	0.030to 12.0GPH Neat Polymer feed rate into 1.0to 20GPM of water	$10,940.00

FEATURING SYDEX PUMP

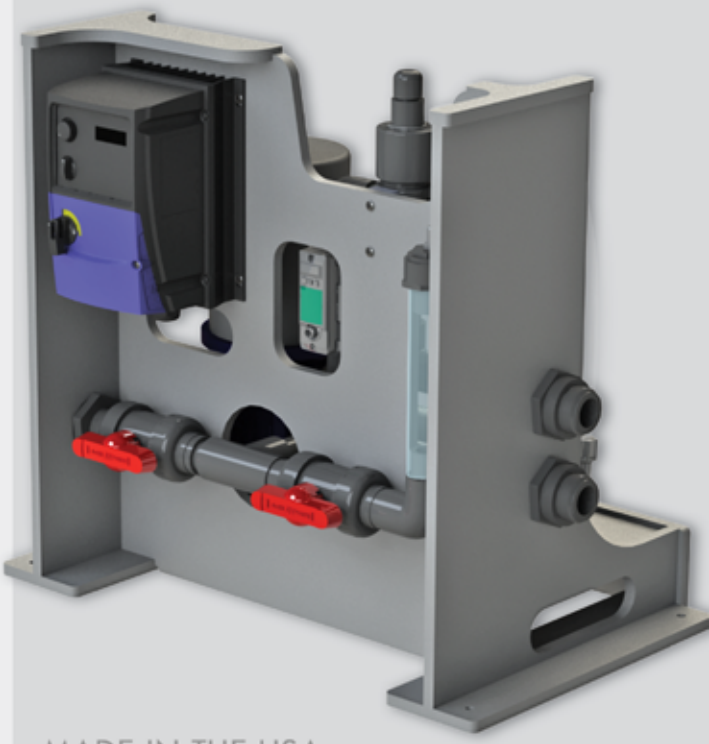

MADE IN THE USA

SPECIFICATIONS (NOT TO SCALE)

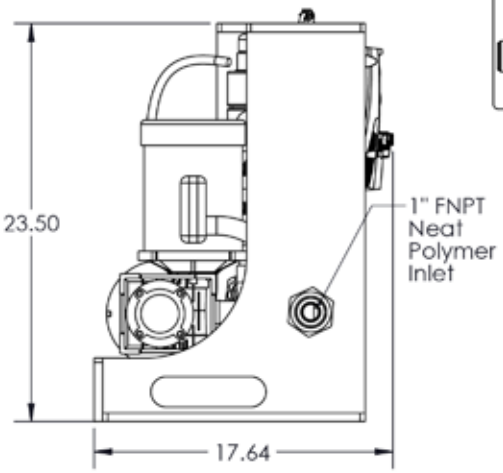

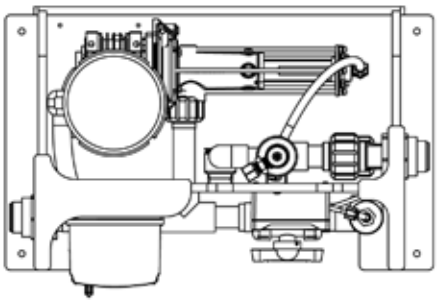

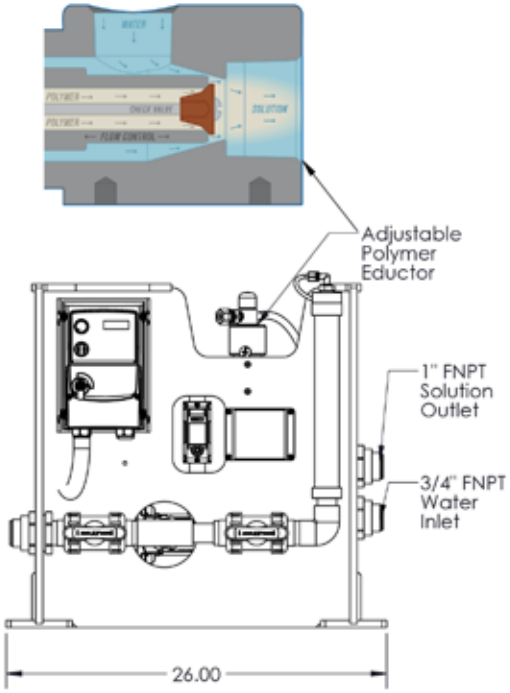

EM SERIES | POLYMER MAKEDOWN SYSTEMS

The *Atlantis Technologies* **EM Series (A-15500)** Polymer Makedown Systems are some of the most popular products we offer. These systems include a solution-aging tank to get the most efficient use of your polymer. Each system is sold as a complete unit with the exception of the solution feed pump, which must be sized and ordered separately for each application.

Four different sizes are currently offered, each with varying available configurations.

AVAILABLE IN 4 DIFFERENT SIZES

- Configurations for various tank sizes, polymer pumps, & solution pumps
- 4" Easy-to-use color touchscreen control panel
- Product fully assembled and tested at our facility
- Remote capabilities for system/solution pump enable & alarm status
- Enclosure constructed from durable and easy-to-clean HDPE

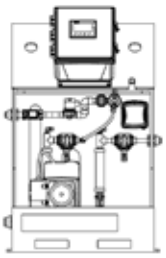

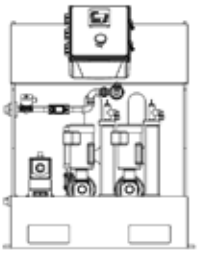

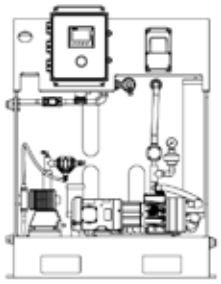

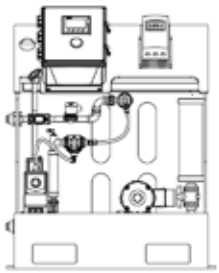

P/N	DESCRIPTION	LIST PRICE
A-15500-WEN-020	20Gal Proportional Poly Makedown System: PP Skid - Age Tank, Mixer, Atlantis Polymer Mixer, Flow Meter, 250ml Cal Tube, Level Control Panel, Sol. Pump Sold Sep	$17,560.00
A-15500-WEN-040	40Gal Proportional Poly Makedown System: PP Skid - Age Tank, Mixer, Atlantis Polymer Mixer, FlowMeter, 250ml Cal Tube, Level Control Panel, Sol. Pump Sold Sep	$16,785.00
A-15500-WKK-090	90Gal Proportional Poly Makedown System: PP Skid - Age Tank, Mixer, Atlantis Polymer Mixer, FlowMeter, 250ml Cal Tube, Level Control Panel, Sol. Pump Sold Sep	$27,220.00
A-15500-WKK-185	185 Gal Proportional Poly Makedown System: PP Skid - Age Tank, Mixer, Atlantis Polymer Mixer, FlowMeter, 250ml Cal Tube, Level Control Panel, Sol. Pump Sold Sep	$31,220.00

PERISTALTIC POLYMER MAKEDOWN SYSTEM
A-15700-XXX-BNNN

The *Atlantis Technologies* **A-15700-XXX-WNNN Polymer Makedown System** is a compact polymer feed system that can be constructed in multiple configurations to allow for varying capacities with a **Watson-Marlow Qdos 20 PU or 60 PU pump.**

- Automatic Low Water Polymer Shutdown
- Proportional Polymer Feed to Water or External Input
- Digital Keyence Doppler Water Flow Meter/ Switch
- Adjustable Polymer Eductor for maximum mixing energy with no moving parts
- All in one unit for simple installation and use
- Requires 115 VAC 15 Amp Supply (power cord not illustrated)
- PVC piping, Viton elastomers, & HDPE stand
- Polymer inlet must be gravity fed with adequate line size for polymer to flow
- Viscosity should not exceed 10,000 cps

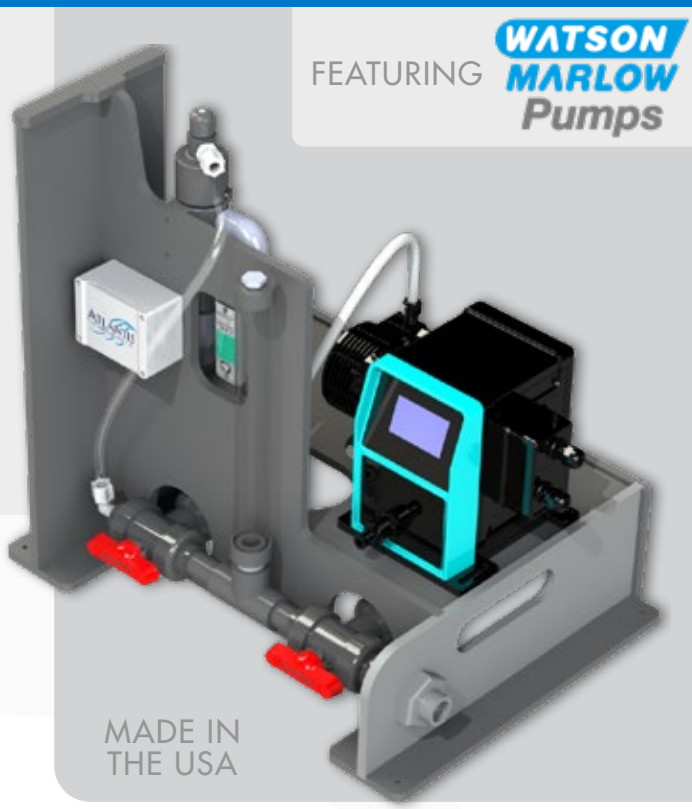

SPECIFICATIONS *(NOT TO SCALE)*

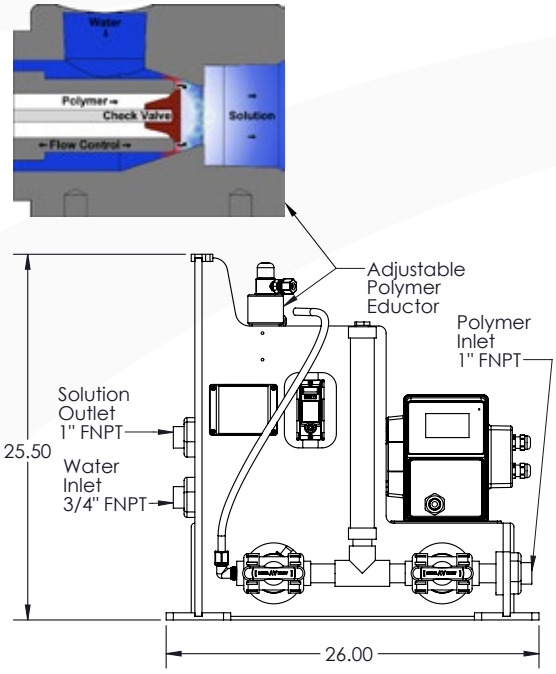

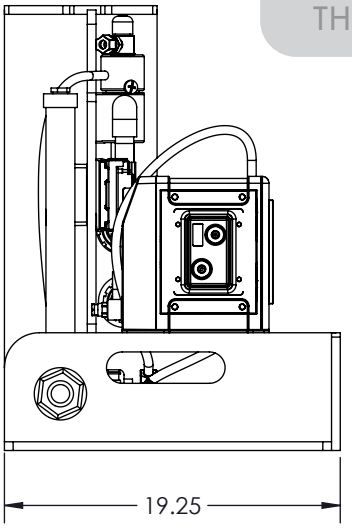

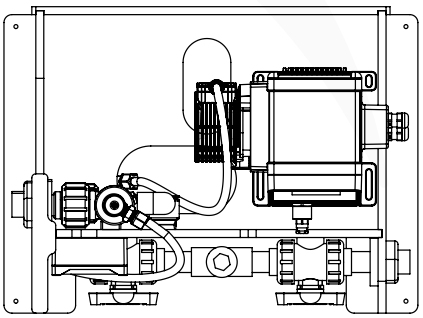

P/N	DESCRIPTION	NEAT POLYMER FLOW	LIST PRICE
A-15700-077-WNNN	7.7 GPH WM QDos 20PU Pump	7.7 GPH	$13,190.00
A-15700-159-WNNN	15.9 GPH WM QDos 60PU Pump	15.9 GPH	$15,720.00
A-15700-077-WNNN-WALL	7.7 GPH WM QDos 20PU Pump (Wall Mount)	7.7 GPH	$13,120.00
A-15700-ENC-W	Drop-On Cover for WM LPBs	-	$1,344.00

PERISTALTIC POLYMER MAKEDOWN SYSTEM

A-15700-XXX-BNNN

The *Atlantis Technologies* **A-15700-XXX-BNNN Polymer Makedown System** is a compact polymer feed system that can be constructed in multiple configurations to allow for varying capacities with a **Blue-White® Peristaltic Metering Pump.**

- Automatic Low Water Polymer Shutdown
- Proportional Polymer Feed to Water or External Input
- Digital Keyence Doppler Water Flow Meter/ Switch
- Adjustable Polymer Eductor for maximum mixing energy with no moving parts
- All in one unit for simple installation and use
- Requires 115 VAC 15 Amp Supply (power cord not illustrated)
- PVC piping, Viton elastomers, & HDPE stand
- Polymer inlet must be gravity fed with adequate line size for polymer to flow
- Viscosity should not exceed 10,000 cps

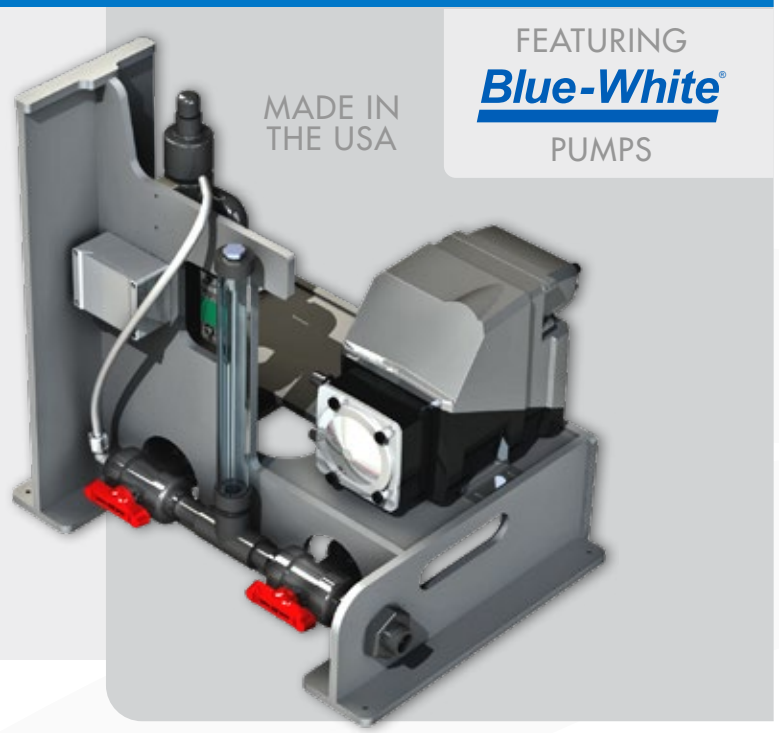

P/N	DESCRIPTION	NEAT POLYMER FLOW	SOLUTION FLOW - 1% SOLUTION	LIST PRICE
A-15700-056-BNNN	5.6 GPH Polymer Makedown System, Blue White A1V4 Pump - 1-10GPM Dilution Water Network, Adjustable Polymer Mixer, HDPE Stand, 250mL Cal Tube, Keyence Flow Meter	5.6 GPH	9.33 GPM *Low Rates will be more diluted	$8,640.00
A-15700-172-BNNN	1.7-17.2 GPH Polymer Makedown System, Blue White Pump A2V4 .35-20GPM Dilution Water Network, Adjustable Polymer Mixing Block, PP Stand, 250ml cal tube Ultrasonic Meter	1.7-17.2 GPH	2.83-28.67 GPM *Low Rates will be more diluted	$10,720.00
A-15700-011-BNNN	1.1 GPH Blue-White A1 Pump	1.1 GPH		$8,100.00
A-15700-056-BNNN	5.6 GPH BW A1 Pump	5.6 GPH		$8,640.00
A-15700-056-BNNW	5.6 GPH BW A1 Pump (Wall Mount)	5.6 GPH		$7,360.00
A-15700-172-BNNN	17.2 GPH BW A2 Pump	17.2 GPH		$10,720.00

HEATED ENCLOSURES

Atlantis produces many custom heated enclosures each year. The following two are our most popular. These enclosures are created from 1/2” polypropylene sandwiched around 1” of insulation to make a very sturdy, chemical-resistant, and well-insulated enclosure. These two enclosures have 100-watt panel heaters and 14” legs. The cost includes the installation of separately purchased W100 or W600 controllers and the pumps.

P/N	DESCRIPTION	LIST PRICE
A-11858 Rev A	Heated and Insulated Enclosure 39” x 18” x 46.75” (h x d x w) room for 2 five gallon pails.	$5,680.00
A-12038 Rev A	Heated and Insulated Enclosure 48” x 19.5” x 49” (h x d x w) room for 3 five gallon pails.	$6,550.00

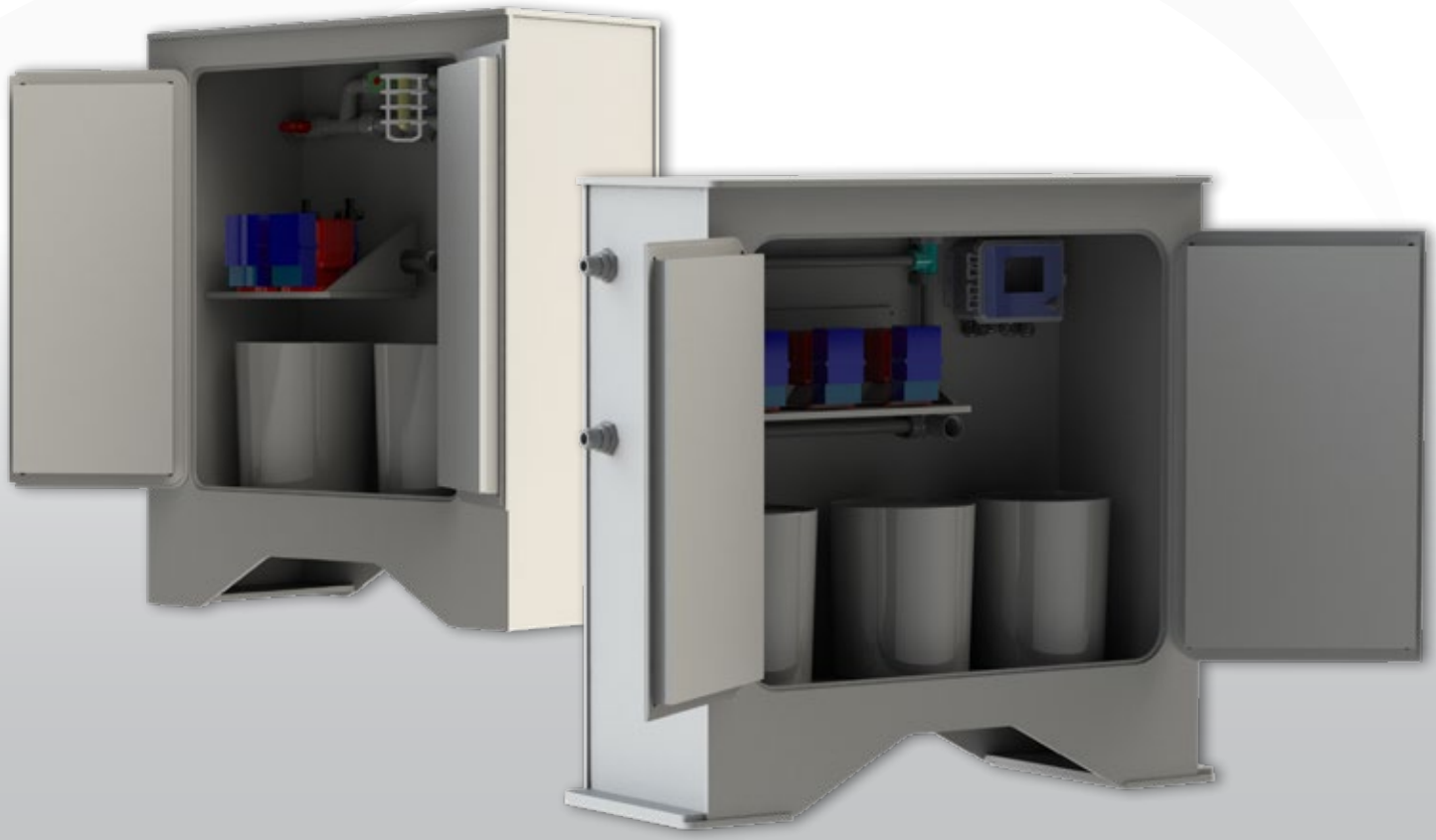

Pyxis PRODUCTS

Handheld Portable Devices

SP-350 Handheld Fluorometer

- Cooling tower fluorescence tracing
- Environmental monitoring
- Single step calibration with liquid standard
- Compensates for color and turbidity
- Bluetooth and WiFi access (calibration and smartphone/software communication)
- IP67 dust-proof and waterproof
- Battery life: 3,200 readings

SP-700 Water Multimeter

- pH, ORP, conductivity, temperature, and PTSA sensor (optional fluorescein for boilers)
- Analysis results in under a minute
- Compensates for color, turbidity, aging, and fouling
- Bluetooth connectivity for calibrating ST-500 directly
- IP67 waterproof and dust-proof
- Battery life: 10,000 readings

SP-910 Portable Water Analyzer

- Fluorometer, colorimeter, turbidimeter, and PTSA/fluorescein
- Performs 54 different colorimeter tests
- True turbidity accuracy (rather than absorbance)
- Bluetooth connectivity for calibrating ST-500 directly
- Upload results to smartphones or computers
- IP67 waterproof and dust-proof
- Battery life: 6 months

P/N	LIST PRICE
Pyxis-SP-350	$1,279.00
Pyxis-SP-910	$2,561.00

ST-500 Inline PTSA Probe

- Reads PTSA dye in water for chemical control in a cooling tower
- Reduces color and turbidity interference
- Real-time monitoring
- CPVC

ST-525SS Fluorescein Probe

- Reads fluorescein dye in water for chemical control in a boiler
- Reduces color and turbidity interference
- Boiler feedwater and blowdown
- Stainless steel

ST-730 Inline Turbidity Probe

- Reads turbidity to control chemical feed with respect to water clarity
- Long sensor life and minimal maintenance
- Cooling, surface, and wastewater applications
- CPVC

ST-565 Inline Triazole Probe

- Eliminates color and turbidity interference
- Measures HST, HRA, and TTA
- Real-time azole detection
- No reagents
- CPVC

P/N	LIST PRICE
Pyxis-ST-500	$2,260.00
Pyxis-ST-525SS	$2,655.00
Pyxis-ST-730	$1,838.00
Pyxis-ST-565	$2,726.00

CHEMICAL STORAGE TANKS

Aca Assmann Single Wall

Assmann manufactures a complete line of single-wall chemical storage tanks ranging from 40 to 12,000 gallons, available in either linear polyethylene (HDPE) or crosslinked polyethylene (XLPE). Tanks are offered in specific gravity ratings from 1.3 to 2.2 to accommodate a wide variety of chemical storage applications.

For most industrial chemicals, Atlantis recommends 1.9 specific gravity crosslinked polyethylene tanks, which provide an excellent balance of chemical resistance and durability. Certain chemicals, such as sulfuric acid, require 2.2 specific gravity tanks and are listed separately.

The following pages include our most commonly stocked 1.9 SG crosslinked polyethylene tanks. To order, simply select the desired tank size and the appropriate fitting package. Most tanks ship FOB Garrett, Indiana, or Marshall, Texas.

Tanks are typically supplied in their natural color, as these are generally in stock and allow for easy visual monitoring of chemical level. Custom colors are available upon request. For outdoor sodium hypochlorite (bleach) storage, a black tank is recommended to help minimize UV degradation of the chemical. Please contact Atlantis for pricing and availability of custom-colored tanks, as the prices shown in this catalog apply to natural-colored tanks only.

GALS	P/N	DIA.	HEIGHT	WEIGHT (LBS)	MANWAY	LIST PRICE
40	A.ICT0040X19*	20”	38”	20	7” Treaded	$267.50
60	A.ICT0060X19*	23”	42”	28	7” Treaded	$373.43
80	A.ICT0080X19*	24”	49”	30	7” Treaded	$468.66
120	A.ICT0120X19*	29”	52”	50	7” Treaded	$730.81
140	A.ICT0140X19*	29”	58”	50	7” Treaded	$730.81
175	A.ICT0175X19*	35”	51”	56	7” Treaded	$757.56
200	A.ICT0200X19*	35”	57”	64	7” Treaded	$852.79
250	A.ICT0250X19*	35”	69”	75	7” Treaded	$1,034.69
300	A.ICT0300X19*	35”	82”	85	7” Treaded	$1,082.84
400	A.ICT0400X19	48”	63”	99	16” Locking	$1,232.64
550	A.ICT0550X19	48”	82”	130	16” Locking	$1,562.20
625	A.ICT0625X19	48”	93”	155	16” Locking	$1,722.70
700	A.ICT0700X19	69”	58”	170	16” Locking	$1,740.89
850	A.ICT0850X19	48”	120”	230	16” Locking	$2,314.41
1000	A.ICT1000X19	64”	84”	205	16” Locking	$2,057.61
1100	A.ICT1100X19	86”	55”	220	16” Locking	$2,192.43
1200	A.ICT1200X19	64”	100”	330	16” Locking	$3,083.74
1500	A.ICT1500X19	64”	121”	415	16” Locking	$3,884.10
1850	A.ICT1850X19	96”	78”	400	16” Locking	$3,767.47
2000	A.ICT2000X19	86”	100”	445	16” Locking	$4,179.42
2050	A.ICT2050X19	64”	165”	620	16” Locking	$5,821.87
2500	A.ICT2500X19	86”	119”	620	16” Locking	$5,784.42
2900	A.ICT2900X19	96”	111”	800	16” Locking	$7,480.37
3000	A.ICT3000X19	90”	122”	800	16” Locking	$7,480.37
4000	A.ICT4000X19	90”	162”	1100	16” Locking	$10,258.09
4100	A.ICT4100X19	119”	108”	1100	16” Locking	$10,258.09
4200	A.ICT4200X19	96”	152”	1100	16” Locking	$10,258.09
5200	A.ICT5200X19	105”	160”	1550	16” Locking	$14,722.13
5500	A.ICT5500X19	119”	141”	1600	16” Locking	$15,067.74
5600	A.ICT5600X19	96”	196”	1750	24” Locking	$16,605.33

*A.MK07 7” Thread Cap Sold Separately

Tank Fitting Packages for Single Wall Tanks

The following list includes fittings for the fill line, U-Vent, and discharge assembly with siphon drain. You will need to order the proper tank-fitting package compatible with the chemical to be stored in the tank to give you the outlet size you desire. The following CC Designation chart should assist you with picking the proper tank-fitting package for your chemical. If you do not see what you are looking for please contact Atlantis for assistance.

CC	P/N	DESCRIPTION	LIST PRICE
E	A.TFP-20-PV-EP-SS20	Tank Fitting Package with 2” Outlet	$760.50
P	A.TFP-20-PV-VI-SS20	Tank Fitting Package with 2” Outlet	$886.00
V	A.TFP-20-PV-VI-TI10	Tank Fitting Package with 1” Outlet	$1,566.00

Small Double Wall

The Double Wall Tank System provides primary and secondary containment in one space-saving integral unit. This system consists of a primary inner tank and secondary containment, with a capacity of 120% of the inner tank, exceeding EPA standards and complying with 40 CFR-264.193. Each tank has a recessed pump shelf molded into the top of the tank. Directly below the shelf is a pump in the primary tank. Suction lines can be lowered into the sump area, allowing for maximum drainage of chemicals with top discharge assemblies.

GALS	P/N	DIA.	HEIGHT	WEIGHT (LBS)	MANWAY	LIST PRICE
20	A.IMT0020L19/L19	26-1/8”	22”	34	7” Treaded	$375.57
40	A.IMT0040L19/L19	26-1/8”	34”	52	7” Treaded	$593.85
65	A.IMT0065L19/L19	26-1/8”	48”	72	7” Treaded	$885.96
85	A.IMT0085L19/L19	34-1/2”	38-1/2”	90	7” Treaded	$967.28
120	A.IMT0120L19/L19	34-1/2”	51”	112	7” Treaded	$1,249.76
150	A.IMT0150L19/L19	47”	44”	130	7” Treaded	$1,211.24
165	A.IMT0165L19/L19	34-1/2”	66”	138	7” Treaded	$1,373.88
250	A.IMT0250L19/L19	26-1/8”	34”	52	7” Treaded	$1,776.20

Tank Filling Assemblies for Small Double Wall Tanks

The small double wall tanks can be filled through the 7” manway, though adding a quick disconnect CamLock fitting to the top of the tank can potentially prevent spills. Ordered separately with the tank, the following assemblies include the necessary bulkhead fitting, elbow, and pipe nipple. A Banjo quick disconnect with a plug or cap will be factory installed before shipment. ***These are only offered in Polypropylene with EPDM since the chemical only is exposed to the fittings and not the gasket.***

P/N	DESCRIPTION	LIST PRICE
A.TFA-10-PP-EP-C	Tank Filling Assembly with 1” Male Quick Disconnect Fitting and Cap.	$72.65
A.TFA-10-PP-EP-F	Tank Filling Assembly with 1” Female Quick Disconnect Fitting and Plug.	$81.39

Large Double Wall

The following chart is for the larger double wall tanks. No fittings are listed for these tanks because the applications vary widely with respect to bottom discharges, fill lines, level probes, and leak detection. The pricing and sizing are listed so that you have an idea of what the options are as far as tanks.

GALS	P/N	DIA.	HEIGHT	WEIGHT (LBS)	MANWAY	LIST PRICE
550	A.IMT0550X19/X19	60”	73”	260	16” Locking	$2,807.68
1050	A.IMT1050X19/X19	72”	87”	426	16” Locking	$4,461.90
1550	A.IMT1550X19/X19	72”	123”	740	16” Locking	$7,731.82
2050	A.IMT2050X19/X19	72”	159”	1330	16” Locking	$14,640.81
3050	A.IMT3050X19/X19	96”	138”	1756	16” Locking	$17,650.72
5250	A.IMT5250X19/X19	119”	154”	3366	16” Locking	$33,044.81
6550	A.IMT6550X19/X19	119”	186”	5220	16” Locking	$48,889.37

CHEMICAL FEED STATIONS

CFS Tank Systems

Chemical Feed Stations (CFS) each consist of a primary tank with a 7” treaded lid, a secondary containment tank, and a discharge assembly. All tanks and containments are designed for 1.9 specific gravity chemicals. Each tank includes a mushroom vent in the lid and a 1/2” tank discharge assembly consisting of a PE outlet fitting with AFLAS gasket, PE valve, tee, plug, and 1/4”, 3/8” and 1/2” tubing fittings. The listed tanks are molded from FDA-compliant linear polyethylene. The CFS systems are also available in crosslinked polyethylene. The pump shelf, tank stand, and calibration tube can be ordered separately if needed.

GALS	P/N	LENGTH	WIDTH	WEIGHT (LBS)	LIST PRICE
40	A.ICT0040L19 + A.IRD0040L + A.IRD0040PS	32”	28”	50	$267.50
60	A.ICT0060L19 + A.IRD0080L + A.IRD0080PS	47”	32”	73	$373.43
80	A.ICT0080L19 + A.IRD0080L + A.IRD0080PS	47”	32”	75	$468.66
140	A.ICT0140L19 + A.IRD0140L + A.IRD0140PS	52”	38”	125	$730.81
200	A.ICT0200L19 + A.IRD0240L + A.IRD0330PS	60”	43”	149	$852.79
400	A.ICT0400L19 + A.IRD0660L + A.IRD0660PS	83”	64”	324	$1,118.15

CFS Plastic Pump Shelves

The following list of shelves can be used on the inside end of the containment basin for the above Chemical Feed Stations. The shelves allow you to mount several pumps on the “lip” of the containment basin so that any leaks will be kept inside of the containment.

P/N	DESCRIPTION	LIST PRICE
A.IRD0040PS	Rectangular Polyethylene Pump Shelf for the A.CFS-040-19-PE-N 40Gallon System	$58.85
A.IRD0080PS	Rectangular Polyethylene Pump Shelf for the A.CFS-060-19-PE-N 60Gallon System or the A.CFS-080-19-PE-N 80Gallon System	$75.97
A.IRD0140PS	Rectangular Polyethylene Pump Shelf for the A.CFS-140-19-PE-N 140Gallon System	$75.97
A.IRD0330PS	Rectangular Polyethylene Pump Shelf for the A.CFS-200-19-PE-N 200Gallon System	$128.40
A.IRD0330PS	Rectangular Polyethylene Pump Shelf for the A.CFS-250-19-PE-N 250Gallon System	$128.40

CFS Plastic Tank Stands

The following list of stands can be used to raise the tank inside the containment basin. This can assist in viewing inventory and keeping a flooded suction to the pumps. These stands can be double stacked to get additional height if desired

P/N	DESCRIPTION	LIST PRICE
A.PTS0020	8” Polyethylene Tank Stand for the A.CFS-040-19-PE-N 40Gallon System	$166.92
A.PTS0024	8” Polyethylene Tank Stand for the A.CFS-060-19-PE-N 60Gallon System and the A.CFS-080-19-PE-N 80Gallon System	$216.14
A.PTS0029	10” Polyethylene Tank Stand for the A.CFS-140-19-PE-N 140Gallon System	$375.57

CFS Calibration Tubes

The following list of calibration tubes can be installed on the outside of the tank and plumbed into the discharge tee. Each tube includes a 1/2” tee, (two) elbows, brackets, and accessories to mount it to the specified tank. They can be used for pump drawdowns to determine flow or to troubleshoot a problem. In addition, they have a detailed inventory gallon sticker to make it easier to determine feed rates between visits. ***Please note that special tubes in Teflon with PVC support shield*** *(highlighted in this blue below)* ***are available for chemicals that are not compatible with PVC, such as sulfuric acid or an amine.***

P/N	DESCRIPTION	LIST PRICE
A-12659-040-A	PVC Calibration tube for CFS 40Gallon System, 38” Tall	$160.00
A-12659-040-TA	Teflon Tubing Calibration tube for CFS 40Gallon System, 38” Tall	$336.20
A-12659-060-A	PVC Calibration tube for CFS 60Gallon System, 43” Tall	$195.00
A-12659-080-A	PVC Calibration tube for CFS 80Gallon System, 49” Tall	$195.00
A-12659-140-A	PVC Calibration tube for CFS 140Gallon System, 58” Tall	$240.00
A-12659-140-TA	Teflon Tubing Calibration tube for CFS 140Gallon System, 58” Tall	$320.00
A-12659-200-A	PVC Calibration tube for CFS 200Gallon System, 57” Tall	$269.45
A-12659-200-TA	Teflon Tubing Calibration tube for CFS 200Gallon System, 57” Tall	$420.00
A-12659-400-A	PVC Calibration tube for CFS 400Gallon System, 63” Tall	$220.00
A-12659-400-TA	Teflon Tubing Calibration tube for CFS 400Gallon System, 63” Tall	$320.00

GENERAL TANK ACCESSORIES

Krueger Sentry At-A-Glance Level Gauge

The At-A-Glance Gauge is a reliable, swing arm type gauge used for measuring all types of liquid levels. Its simple mechanical design promotes durability, minimal upkeep, and easy and inexpensive repairs. This inexpensive level gauge will not provide daily feed rates but will allow you to monitor the general level of your tank. These gauges can be configured to most tanks from 17” to 110” tall. Below are some of the common sensors that we sell for the Assmann double wall tanks. All sensors require a 1.5” bulkhead fitting for installation. Please contact Atlantis if you do not see the tank listed below that you would like to measure or if you would like to discuss your application.

P/N	TANK SIZE	LIST PRICE
K.P-2-22>7	A.IMT-00040	$422.80
K.P-2-37>7	A.IMT-00065	$445.80
K.P-2-26>7.5	A.IMT-00085	$422.80
K.P-2-39>7.5	A.IMT-00120	$445.80
K.P-2-53>7.5	A.IMT-00165	$465.50
K.P-2-64>9	A.IMT-00400	$395.30

FLOWLINE LEVEL BEST Radar & Ultrasonic Level Sensors

Flowline Level Sensors use a pulsing sound generator and receiver to read sound echoes between the sensor and liquid level to provide a continuous level measurement. Ultrasonic Level Sensors work well in tanks that have a perpendicular, unobstructed view directly to the non-turbulent surface of a liquid. ***Please note that the sensors should never be mounted in the center of a domed-top tank.***

Atlantis offers three different Flowline Level Sensor families:

The DL ultrasonic family is a less expensive sensor designed for smaller tanks. It will generate a 4-20mA signal over its maximum range. The 4-20mA signal can be reduced to cover the height of your tank by programming the sensor off-line with a USB programming FOB and free software from Flowline. The sensor does not have a local display.

The LU ultrasonic family is designed for more difficult applications with options available to read heights up to 32.8'. The sensor has an integral push button display that allows you to calibrate and program the range directly from the sensor installed on the tank. They also included a patented software technology that allows the sensor to ignore echoes generated by internal obstructions in the tank, such as mixers and ladders, as long as they are not within a 3" diameter beam area directly below the sensor.

The EchoBeam® LR series utilizes radar, as opposed to ultrasonic technology featured in the previous model lines. EchoBeam® is the most reliable and easy-to-use non-contact level sensor transmitter. Flowline's 80-GHz radar technology is unaffected by most media, process or environmental factors, and the intuitive LevelTap™ App makes configuration simple.

P/N	INTEGRAL DISPLAY	SHORTEST RANGE	LONGEST RANGE	PROGRAMMING FOB INCLUDED	PROCESS MOUNT (NPT)	LIST PRICE
DL14-00	N	2”	49.2”	N	1”	$495.00
DL14-01	N	2”	49.2”	Y	1”	$565.00
DL24-00	N	2”	9.8’	N	1”	$660.00
DL24-01	N	2”	9.8’	Y	1”	$725.00
LU80-5101	Y	4”	9.8’	N/A	1”	$880.00
LU81-5101	Y	8”	18’	N/A	2”	$1,040.00
LU83-5101	Y	8”	26.2’	N/A	2”	$1,065.00
LU84-5101	Y	12”	32.8’	N/A	2”	$1,250.00
LR80-0000	N	0”	32.8’	N/A	1 1/2”	$835.00
LR81-0000	N	0”	98.4’	N/A	1 1/2”	$1,005.00
LR83-0300	N	0”	98.4’	N/A	1 1/2”	$1,110.00
UG01-0001-40	N	1.5”	4.9’	N	2”	$580.00
UG01-0001-41	N	1.5”	4.9’	Y	2”	$645.00
UG03-0001-40	N	4”	9.8’	N/A	2”	$660.00
UG03-0001-41	N	4”	9.8’	Y	2”	$725.00
UG06-0001-00	Y	8”	19.6’	N	2”	$880.00
UG06-0001-01	Y	8”	19.6’	Y	2”	$945.00

FLOWLINE LEVEL BEST Optic Leak Detector

The general-purpose optic switch is a great choice for leak detection in and around secondary containment sumps, tanks, and pipes. The sensor can be applied in a broad range of chemical solutions. It has no moving parts and works on the principle of light reflection. If liquid encounters the clear, angled window on the end of the sensor, the light will be absorbed into the liquid instead of being reflected back to the transmitter. Media examples include chlorine, deionized water, and chromic acid. The sensor is submersible and can be mounted within the interstitial space of a double containment vessel, laid in the bottom of a containment basin, or threaded into a 3/4" NPT fitting installed in the side of a tank. Powered by 24 VDC, these fail-safe sensors can be wired as normally-open or normally-closed contacts and will invert to "wet" to alert the user for proactive maintenance. They can be purchased in either polypropylene (PP) or Teflon (PFA).

P/N	MATERIAL	CABLE LENGTH	LIST PRICE
LO10-1305	PP	10'	$220.00
LO10-1305-25	PP	25'	$275.00
LO10-1305-50	PP	50'	$330.00
LO10-2305	PFA	10'	$395.00
LO10-2305-25	PFA	25'	$615.00

Tote Bin Pump Boxes and Sight Gauges

Atlantis manufactures accessories specifically for tote bins. Lockable plastic pump boxes are offered in sizes that will fit single, double, and triple electronic metering pumps. They have a clear window to allow inspection without opening the box. The front and 2/3 of the top fold down for service to prevent chemical burns from reaching into a box that may have chemical droplets on the ceiling. Atlantis tote bin sight gauges are designed with hooks that allow you to move them from one tote to another. Each sight gauge has a calibration label for determining flow rates of your feed pump and allowing for easy viewing of the tank level.

P/N	DESCRIPTION	LIST PRICE
A-16200-1T	Tote Bin Box for 1 Solenoid Pump. Clear cover for viewing and programming. SS Hangers for Totes, PP Hinges. 14Wx17Dx17H	$620.00
A-16200-2T	Tote Bin Box for 2 Solenoid Pumps. Clear cover for viewing and programming. SS Hangers for Totes, PP Hinges. 23Wx17Dx17H	$680.00
A-16200-3T	Tote Bin Box for 3 Solenoid Pumps. Clear cover for viewing and programming. SS Hangers for Totes, PP Hinges - 30W x 17D x17H	$780.00
A-14839	275 gallon tote sight gauge. 42” tall, Includes mounting brackets, PP Valve, Female 2” Banjo, PP 3/4” tee, (2) PVDF elbows, and FEP Tubing w/PVC Shield	$420.00
A-14840	330gallon tote sight gauge, 49” tall, Includes mounting brackets, PP Valve, Female 2” Banjo, PP 3/4” tee, (2) PVDF elbows, and FEP Tubing w/PVC Shield	$460.00

Tote Bin Recirc System

The recirc system is used to recirculate emulsion polymer in a tote storage bin. The system keeps the product homogeneous by circulating it once a day for an hour or per the user's programmed actions. Our tote bin recirculation systems are built using a polypropylene Iwaki air operated pump with a Teflon coated diaphragm. It includes a 7-day digital timer control panel, air regulator, and filter. Connections to the pump are 3/4" FNPT.

P/N	DESCRIPTION	LIST PRICE
A-11742-IW	30GPM PP Air Diaphragm Bin Recirc Sys, Includes: 7 Day Digital Timer Control Panel, Air Reg/Filter, Iwaki Air pump w/PTFE Diaphragm, 3/4 FNPT Connectors	$3,760.00

COUPON RACKS

Standard Coupon Racks

Our Coupon Racks are designed for easy coupon removal without any tools. All racks are 1” inlet and outlet with 1” coupon legs, 1” isolation valves, and eight GPM dole valves to control the flow rate. All coupon holders are 3/4” union style. Options include:

- ✓ Pre-assembled and ready to hang on the wall
- ✓ Gray PVC coupon legs
- ✓ Clear PVC coupon legs
- ✓ Gray CPVC coupon legs

P/N	PRE-ASSEMBLED ON PP PANEL	GRAY PVC COUPON LEGS	CLEAR PVC COUPON LEGS	GRAY CPVC COUPON LEGS	LIST PRICE
A-12251-1	X	1			$570.00
A-12251-2	X	2			$1,140.00
A-12251-2-CPVC	X			2	$962.31
A-12251-3	X	3			$928.80
A-12251-4	X	4			$1,060.00
A-12251-4-L		4			$500.00
A-12251-4-C	X		4		$1,420.00

PUMP SHELF WALL MOUNTS

A-16109 Standard Shelf Configurations

These pump shelves are designed to hold various pumps in quantities from 1-5, and are attached to panels for easy mounting to walls or other flat surfaces.

P/N	DESCRIPTION	LIST PRICE
A-16109-1	One Pump Shelf	$78.00
A-16109-1T	One Pump Shelf Tote Mount	$120.00
A-16109-2	Two Pump Shelf	$129.00
A-16109-2N	Two Pump No-Shelf Mount	$48.00
A-16109-2-1	Three Pump Shelf Tiered	$160.00
A-16109-3	Three Pump Shelf	$140.00
A-16109-3N	Three Pump No-Shelf Mount	$60.00
A-16109-4	Four Pump Shelf	$162.00
A-16109-5	Five Pump Shelf	$100.00

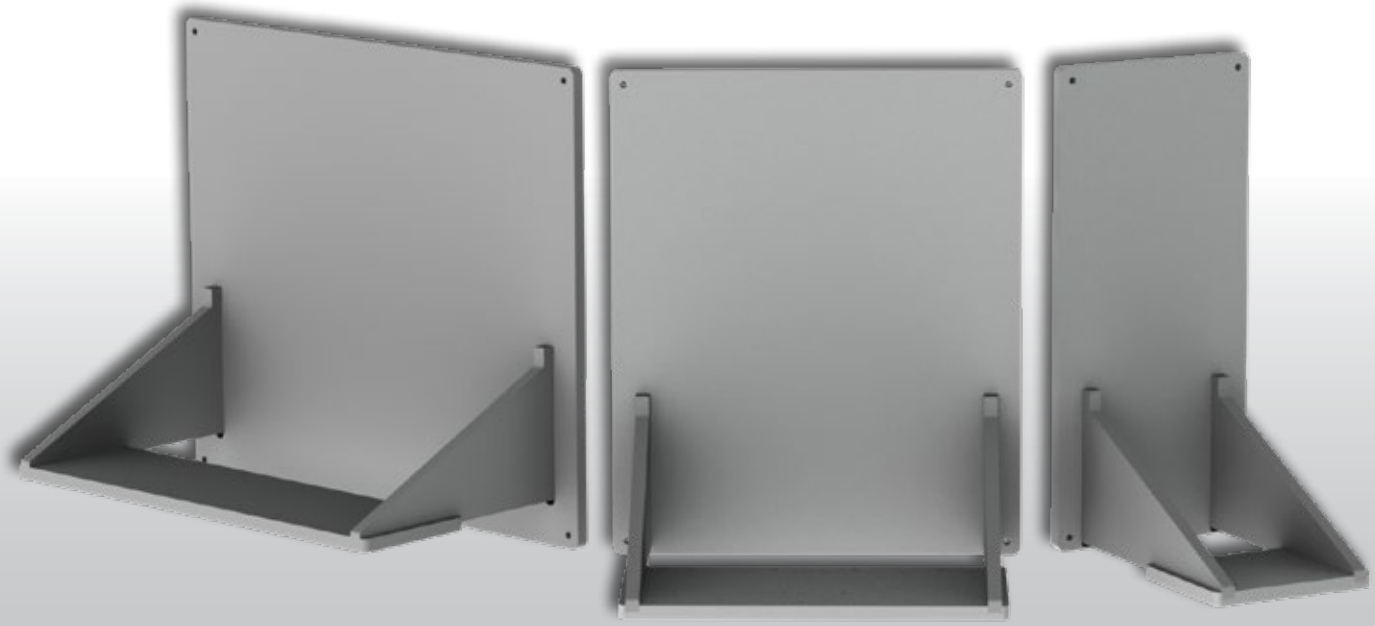

VALVES

Flow Control Dole Valves

The Dole Flow Regulator is designed to deliver a constant volume of water flow over a wide pressure drop range. The constant flow of water is maintained using a flexible orifice. The desired flow rate is controlled to be within 15% of the rated flow as long as the pressure is between 15 and 125 PSI. Maximum pressure is 200 PSI. It is manufactured from nickel plated brass with a Buna-N orifice.

P/N	DESCRIPTION	LIST PRICE
DOLE-GY2-007	2 GPM Dole Valve, 3/4 FNPT x 3/4 MNPT	$58.00
DOLE-GY3-007	3 GPM Dole Valve, 3/4 FNPT x 3/4 MNPT	$58.00
DOLE-GY4-007	4 GPM Dole Valve, 3/4 FNPT x 3/4 MNPT	$58.00
DOLE-GY5-007	5 GPM Dole Valve, 3/4 FNPT x 3/4 MNPT	$58.00
DOLE-GY8-007	8 GPM Dole Valve, 3/4 FNPT x 3/4 MNPT	$58.00
DOLE-GY10-007	8 GPM Dole Valve, 3/4 FNPT x 3/4 MNPT	$58.00

Cooling Tower Blowdown ASCO Solenoid Valves

The following list consists of the most common bronze ASCO solenoid valves that are used for cooling tower blowdown. Each valve is a 2-Way, Normally-Closed, 115 VAC. They are general-purpose valves that can handle 125° F ambient temperatures and 180° F water temperatures. At the end of the list, you will see power cord options that can be ordered to provide a 115 VAC plug pre-wired to your valve.

P/N	DESCRIPTION	LIST PRICE
8210G094	½” Brass Solenoid Valve, 10.1 Watt, 0-150PSI	$223.00
8210G095	¾” Brass Solenoid Valve, 10.1 Watt, 0-150PSI	$239.00
8210G054	1” Brass Solenoid Valve, 16.1 Watt, 0-125 PSI	$510.00
	Power Cords – Addition of an 18 AWG power and all necessary fittings to make the connection NEMA 4. Order solenoid valve separately.	
A-11775-A	8’ 115 VAC plug	$80.00
A-11775-A-10	10’ 115 VAC plug	$75.00
A-11775-A-20	20’ 115 VAC plug	$100.00
A-11775-A-00L	Fittings used to add your own power cord or SO cord to an ASCO valve	$65.00
P-10999	Solenoid Valve Power Cable w/ DIN Connector To USA 15A Plug, 6’ long cord	$57.88

CTV Valves

The CTV (Cooling Tower Valve) Series available through Atlantis Technologies is a range of high-quality motorized ball valves that allow for precise control of a wide range of fluid and air applications.

CTV Series valves consist of durable engineered PPO actuators and nickel-plated brass valve bodies that are designed to last and perform with precision under most conditions in the industry.

P/N	DESCRIPTION	LIST PRICE
CTV-002-BR-3	1/4” 3-Way Cooling Blowdown Valve	$280.00
CTV-050-BR	1/2” Cooling Blowdown Valve	$240.00
CTV-075-BR	3/4” Cooling Blowdown Valve	$245.00
CTV-075-BR-3	3/4”Cooling Blowdown Valve 3-Way	$280.00
CTV-100-BR	1” Cooling Blowdown Valve	$265.00

BLR Valves

BLR Series valves provide reliable flow control for boiler water treatment and blowdown applications. Available in a range of sizes and configurations, these industrial-duty valves are designed for dependable operation in demanding boiler systems. Options include motor-operated boiler blowdown valves for automated control as well as Vogt flow control valves for manual applications.

P/N	DESCRIPTION	LIST PRICE
BLR-12141-005	1/2” Vogt Flow Control Valve	$357.00
BLR-12141-010	1” Vogt Flow Control Valve	$318.75

AT SERIES MULTI-JET COLD WATER METERS

AT Series water meters use a widely accepted multi-jet principle, as a gear train drives the register totalizer dials. For pulse output meters, a reed switch sensor is attached to the outside of the lens and detects a magnet arm that has replaced one of the dial pointers. The reed switch output is a dry contact closure and does not require power. The meters are offered in sizes from 5/8” to 2” and can be configured in various “pulse per gallon” ranges. The meters can operate in environmental conditions less than 105° F and 150 PSI.

Listed below are the most common sizes. Contact Atlantis if you do not see a meter that fits your needs.

P/N	DESCRIPTION	LIST PRICE
AT-062	5/8” Water Meter, ½” NPT Male Connections, Totalizer Only, 0.133-13.2 GPM	$153.00
AT-062-R/10G	5/8” Water Meter Contactor, ½” NPT Male Connections, Reed Switch, 12’ cable, 10Gallons/Pulse, 0.133-13.2 GPM	$204.00
AT-075	¾” Water Meter, ¾” NPT Male Connections, Totalizer Only, 0.22-22.0GPM	$181.00
AT-075-R/10G	¾” Water Meter Contactor, ¾” NPT Male Connections, Reed Switch, 12’ cable, 10Gallons/Pulse, 0.22-22.0GPM	$235.00
AT-100	1” Water Meter, 1” NPT Male Connections, Totalizer Only, 0.31-30.8 GPM	$298.00
AT-100-R/100G	1” Water Meter Contactor, 1” NPT Male Connections, Reed Switch, 12’ cable, 100Gallons/Pulse, 0.31-30.8 GPM	$351.00
AT-150	1-1/2” Water Meter, 1-1/2” NPT Male Connections, Totalizer Only, 0.88-88.0GPM	$579.00
AT-150-R/100G	1-1/2” Water Meter Contactor, 1-1/2” NPT Male Connections, Reed Switch, 12’ cable, 100Gallons/Pulse, 0.88-88.0GPM	$642.00
AT-200	2” Water Meter, 2” NPT Male Connections, Totalizer Only, 1.32-132.0GPM	$909.00
AT-200-R/100G	2” Water Meter Contactor, 2” NPT Male Connections, Reed Switch, 12’ cable, 100Gallons/Pulse, 0.88-88.0GPM	$971.00

BOILER ACCESSORIES

BLR-1000 Series Valves

BLR-1000 series motorized valves provide automated opening and closing for boiler blowdown applications. Used with a compatible boiler controller, they help manage the discharge of concentrated boiler water as part of a controlled water treatment program.

Available in ½”, ¾”, and 1” sizes to suit a range of piping configurations.

P/N	DESCRIPTION	LIST PRICE
BLR-1000	1/2 Boiler Blowdown Mtr Valve	$1,809.30
BLR-1000.75	3/4 Boiler Blowdown Mtr Valve	$2,091.09
BLR-1000.100	1 Boiler Blowdown Mtr Valve	$2,122.10

Flowserve Boiler Blowdown Valves

Flowserve motorized ball valves provide automatic shutoff and opening for boiler blowdown systems. Paired with a compatible boiler controller, they support conductivity control by releasing boiler water when blowdown is required. Available in ½”, ¾”, and 1” sizes, these assemblies feature enclosed electric actuators for operation in demanding industrial environments.

P/N	DESCRIPTION	LIST PRICE
102448	Walchem Motorized Ball Valve, boiler, 1/2,0-300PSI	$1,673.00
102449	Motorized Ball Valve, boiler, 3/4,0-250PSI,115vac. Flowserve	$1,767.00
102450	Motorized Ball Valve, boiler 1,0-300PSI,115vac. 1” A444466PMSE with 1036 W 120 Actuator	$2,020.00

Orifice Union / Plates

Orifice unions provide a fixed restriction to help control boiler blowdown flow and maintain back pressure. Each union includes four interchangeable plates, allowing the restriction to be selected for the application. Available in ½”, ¾”, and 1” pipe sizes, these assemblies offer a straightforward flow control option for boiler blowdown piping.

P/N	DESCRIPTION	LIST PRICE
102224	Orifice Union, 1/2”, with 4 Orifice plates, 0-1000 psi	$625.00
102225	Orifice Union, 3/4”, with 4 Orifice plates, 0-1000 psi	$668.00
102226	Orifice Union, 1”, with 4 Orifice plates, 0-1000 psi	$739.00

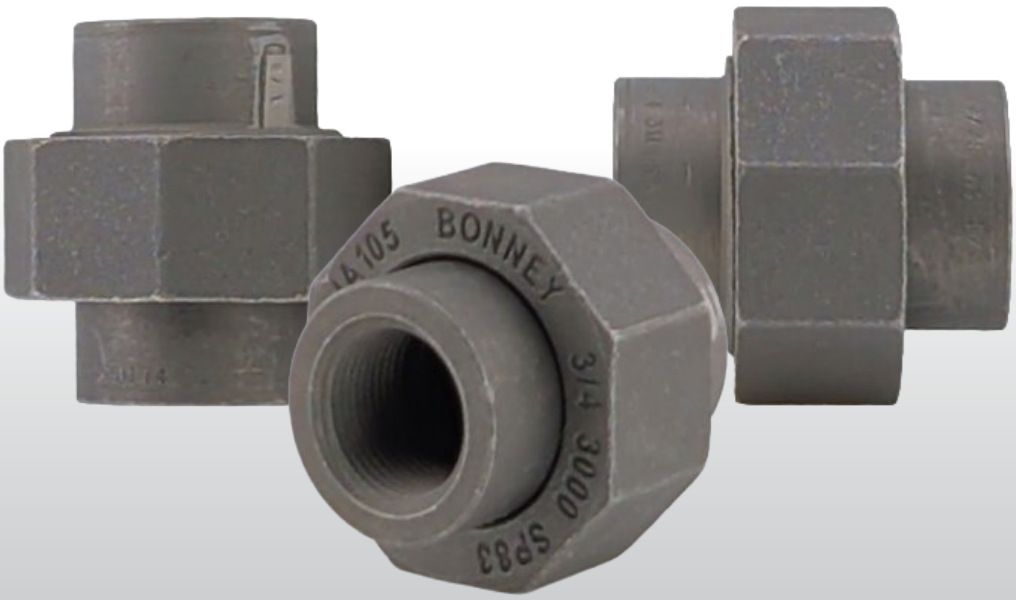

GENERAL ACCESSORIES

Calibration Tubes

Calibration Cylinders are installed on the suction side of the metering pump and are isolated with two valves installed with the cylinder. The top of the cylinder is vented back to the supply tank or drain. The calibration cylinder is filled to the top mark, and then the valve from the tank is closed. Turning on the pump will draw down the liquid providing a simple means to verify the accuracy of the pump flow rate. Gallons per hour and mL are shown on the cylinder.

P/N	DESCRIPTION	LIST PRICE
PT-CCV-VN-00050-007-0505GN-ATL-00	50ml PVC calibration tube, ½” FNPT, 1ml increments, 3/4” x 13.5”	$80.00
PT-CCV-VN-00125-012-0505GN-ATL-00	125 ml PVC calibration tube, ½” FNPT, 5 ml increments, 1-1/4” x 9-7/8”	$95.00
PT-CCV-VN-00250-012-0505GN-ATL-00	250ml PVC calibration tube, ½” FNPT, 5 ml increments, 1-1/4” x 14-1/8”	$110.00
PT-CCV-VN-00500-025-1010GN-ATL-00	500ml PVC calibration tube 1” FNPT, 10ml increments, 2-1/2” x 12-5/8”	$120.00
PT-CCV-VN-00750-025-1010GN-ATL-00	750ml PVC calibration tube 1” FNPT, 10ml increments, 2-1/2” x 14-1/8”	$120.00
PT-CCV-VN-01000-025-1010GN-ATL-00	1000ml PVC calibration tube 1” FNPT, 10ml increments, 2-1/2” x 18-5/8”	$160.00
PT-CCV-VN-02000-025-1010GN-ATL-00	2000ml PVC calibration tube 1” FNPT, 10ml increments, 2-1/2” x 31-7/8”	$180.00
PT-CCV-VN-05000-040-1010GN-ATL-00	5000ml PVC calibration tube 1” FNPT, 50ml increments, 4” x 29-1/4”	$239.38
PT-CCV-VN-10000-040-1010GN-ATL-00	10000ml PVC calibration tube 1” FNPT, 50ml increments, 4” x 53-5/8”	$420.00

Glass Calibration Cylinders

Glass Calibration Cylinders are installed on the suction side of the metering pump and are isolated with two valves installed with the cylinder. The top of the cylinder is vented back to the supply tank or drain. The calibration cylinder is filled to the top mark, then the valve from the tank is closed. Turning on the metering pump will draw down the liquid providing a simple means to verify the accuracy of the pump flow rate. USGPH (gallons per hour) and ML (milliliters) are shown on the cylinder.

SIZE (ML)	P/N	PVC (P)	POLYPRO (PP)	CPVC (CP)	TEFLON (T)	KYNAR (K)	316SS (S)	CONNECTIONS	CAPACITY (GPH)
100	SM-CGN100_T	$345.00	$363.00	$448.00	$515.00	$660.00	$644.00	1/2”	3.2
200	SM-CGN200_T	$371.00	$397.00	$458.00	$530.00	$665.00	$659.00	1/2”	6.4
500	SM-CGN500_T	$515.00	$536.00	$700.00	$850.00	$1,144.00	$870.00	3/4”	16
1000	SM-CGN1K_T	$556.00	$577.00	$783.00	$881.00	$1,205.00	$927.00	3/4”	32
2000	SM-CGN2K_T	$881.00	$937.00	$1,494.00	$1,638.00	$2,338.00	$1,725.00	1”	64
4000	SM-CGN4K_T	$978.00	$1,025.00	$1,612.00	$1,730.00	$2,442.00	$1,834.00	1”	128
10,000	SM-CGN10K_T	$4,203.00	call	$4,656.00	call	$9,919.00	$7,107.00	2”	320
20,000	SM-CGN20K_T	$4,790.00	call	$5,892.00	call	$10,403.00	$8,447.00	2”	640

SIGMAMOTOR INC. *Back Pressure and Pressure Relief Valves*

SigmaMotor back pressure valves prevent siphoning and varying rates of dosage from fluctuating downstream pressure by enacting positive discharge pressure in your metering pump system. Pressure relief valves operate when the system pressure raises above the set pressure of the valve to protect systems from damage due to blockages or excessive pressure situations. Inside the valves are diaphragms held in place by a spring which is pressure set. When the pressure is exceeded the diaphragm is pushed up and material flows through the valve to the injection point. Back pressure valves are set at 50 PSI, and pressure relief valves are set at 65 PSI, but both are easily adjusted in the field.

Replace **X** in P/N with preferred material **X = Material Code**: P = PVC, PP = POLYPRO, CP = CPVC, T = TEFLON, K = KYNAR, S = 316SS, A = ALLOY 20, H = HAST C276

SIZE	P/N	PVC (P)	POLYPRO (PP)	CPVC (CP)	TEFLON (T)	KYNAR (K)	316SS (S)	ALLOY 20 (A)	HAST C276
1/4”	SM-BN250-_	$203.00	$211.00	$287.00	$406.00	$453.00	$578.00	$1,185.00	$1,643.00
3/8”	SM-BN375-_	$203.00	$211.00	$287.00	$406.00	$453.00	$578.00	$1,185.00	$1,643.00
1/2” Mini	SM-BN499-_	$220.00	$228.00	$393.00	$546.00	$664.00	$636.00	$1,296.00	$1,844.00
1/2”	SM-BN500-_	$362.00	$390.00	$466.00	$645.00	$847.00	$752.00	$1,658.00	$3,075.00
3/4”	SM-BN750-_	$403.00	$422.00	$524.00	$672.00	$885.00	$774.00	$1,674.00	$3,120.00
1”	SM-BN100-_	$525.00	$543.00	$728.00	$882.00	$1,079.00	$1,000.00	$2,000.00	$3,399.00
1 1/2”	SM-BN150-_	$1,159.00	$1,226.00	$1,751.00	$2,287.00	$2,884.00	$2,550.00	call	call
2”	SM-BN200-_	$1,308.00	$1,380.00	$1,937.00	$2,400.00	$3,018.00	$2,663.00	call	call

SIGMAMOTOR INC. *Pulsation Dampeners*

SigmaMotor pulsation dampeners greatly reduce the fluid pulsing action of positive displacement pumps to protect pumping systems from potential damage. The result is a smoother and more consistent flow in chemical feed applications. A pressurized diaphragm separates the pumped fluid and acts to absorb pulsations in the pipe. An FNPT port is provided for connection to the pressure source.

Replace **X** in P/N with preferred material
X = Material Code: P = PVC, PP = POLYPRO, CP = CPVC,
T = TEFLON, K = KYNAR

Replace **X** in P/N with preferred material
X = Material Code: P = PVC, PP = POLYPRO, CP = CPVC, T = TEFLON, K = KYNAR

SIZE (CU. IN.)	P/N	PVC	POLYPRO	CPVC	TEFLON	KYNAR	CONNECTIONS
12	SM-FLN12-_	$381.00	$400.00	$471.00	$509.00	$615.00	1/2”
40	SM-FLN40-_	$912.00	$943.00	$1,326.00	$1,900.00	$2,514.00	1”
85	SM-FLN85-_	$975.00	$999.00	$1,540.00	$2,080.00	$2,728.00	1”

SIGMAMOTOR INC. *4" Injection Quills*

SigmaMotor EL Series Injection Quills are used to provide safe delivery of chemicals into pipelines. The quill end ensures the dispersion of the chemicals away from the pipe wall. The integral spring-loaded check valve prevents backflow from the pressurized pipe if there is a break in the discharge piping. A union connection on the inlet allows for ease of installation and maintenance.

Replace **X** in P/N with preferred material

X = Material Code: P = PVC, PP = POLYPRO, CP = CPVC, T = TEFLON, K = KYNAR, S = 316SS

P/N	PVC (P)	POLYPRO (PP)	CPVC (CP)	TEFLON (T)	KYNAR (K)	316SS (S)	CONNECTIONS (IN X OUT)
SM-IQN500-_	$233.00	$242.00	$262.00	$395.00	$583.00	$810.00	1/2" NPT
SM-IQN750-_	$233.00	$242.00	$262.00	$395.00	$583.00	$810.00	3/4" NPT

WALCHEM Injection Quills
(Included with most Walchem Pumps)

When injecting chemicals into a stream of water, preventing the water from working its way back into the chemical piping can be a challenge. Injections quills are a great way to combat this issue as they feature a check valve to prevent back-feeding with water. The injection quills also act as a back-pressure valve to assure that the chemical is only fed when the pump forces it to do so. In addition, the injection valve feeds the chemical into the stream of water away from the wall of the pipe so that it is diluted before it is in contact with the pipe walls.

P/N	DESCRIPTION	LIST PRICE
CAN-1VC-7	3/8” Tubing In | PVC Body | FKM Seals | 25 PSI Back Pressure | Clear | 3/8” & 1/2” MNPT Process Connections | Replaced E90001	$63.00
CAN-1VE-7	3/8” Tubing In | PVC Body | EPDM Seals | 25 PSI Back Pressure | Clear | 3/8” & 1/2” MNPT Process Connections | Replaced E90002	$63.00
CAN-1PC-7	3/8” Tubing In | GFRPP Body | FKM Seals | 25 PSI Back Pressure | Black | 3/8” & 1/2” MNPT Process Connections | Replaced E90003	$63.00
CAN-1PE-7	3/8” Tubing In | GFRPP Body | EPDM Seals | 25 PSI Back Pressure | Black | 3/8” & 1/2” MNPT Process Connections | Replaced E90004	$63.00
CAN-2VC-8	Injection Valve, 1/2”,VC, MED Pressure 25psi, Hastelloy Springs (REPLACED E90005)	$68.00
CAN-2VE-8	1/2 PVC Injection Valve, 50 PSI backpressure, EPDM seals for 30 VE/V6 pumps,Hastelloy Springs (REPLACED E90006)	$68.00
CAN-2VCL-8	1/2” Tubing In | PVC Body | FKM Seals | 8 PSI Back Pressure | Clear | 3/8” & 1/2” MNPT Process Connections | Replaced E90007	$68.00
CAN-2VEL-8	1/2” Tubing In | PVC Body | EPDM Seals | 8 PSI Back Pressure | Clear | 3/8” & 1/2” MNPT Process Connections | Replaced E90008	$68.00
CAN-2PC-8	1/2 30, 35 PC Injection Valve, 14 PSI backpressure, FKM seals, Hastelloy Springs (REPLACED E90009)	$68.00
CAN-2PE-8	1/2 30, 45 PE Injection Valve, 14 PSI backpressure, EPDM seals (REPLACED E90010)	$68.00
CAN-2PCL-8	1/2” Tubing In | GFRPP Body | FKM Seals | 8 PSI Back Pressure | Black | 3/8” & 1/2” MNPT Process Connections | Replaced E90011	$68.00
CAN-2PEL-8	1/2” Tubing In | GFRPP Body | EPDM Seals | 8 PSI Back Pressure | Black | 3/8” & 1/2” MNPT Process Connections | Replaced E90012	$68.00

Tri-Purpose Valves

Walchem's economical Tri-Purpose Valves are three valves in one. Installed in one direction, the spring loaded PTFE faced diaphragm provides 30 PSI of back pressure and anti-syphon protection. Installed in the opposite direction, it provides pressure relief that is adjustable from 30-125 PSI.

P/N	DESCRIPTION	
8011-C	Tri-purpose valve (anti-syphon, pressure relief, or back pressure, 1/2 NPTF in-line connection), PVC/Teflon construction	$257.00
8011-CP	Tri-purpose valve (anti-syphon, pressure relief, or back pressure, 1/2 NPTF in-line connection), Polypropylene/Teflon construction	$274.00

Pressure Gauge Chemical Seal / Isolator

SigmaMotor pressure gauge isolators allow inexpensive pressure gauges to be used in corrosive services. The upper section (gauge side) is filled with glycerin. A diaphragm separates the glycerin from the lower section which connects to the pressure source. A 1/2” FNPT port is provided for connection to the pressure source.

Replace X in P/N with preferred material X = Material Code: P = PVC, PP = POLYPRO, CP = CPVC, T = TEFLON, K = KYNAR, S = 316SS

PSI	P/N	PVC (V)	POLYPRO (P)	CPVC (C)	316SS (S)	PVDF (K)
30	PT-GG-_T-S25-030G-00	$192.00	$-	$192.00	$192.00	$192.00
60	PT-GG-_T-S25-060G-00	$192.00	$-	$192.00	$192.00	$192.00
100	PT-GG-_T-S25-100G-00	$192.00	$-	$192.00	$192.00	$192.00
160	PT-GG-_T-S25-160G-00	$192.00	$-	$192.00	$192.00	$192.00
200	PT-GG-_T-S25-200G-00	$192.00	$-	$192.00	$192.00	$192.00

Pump Shelf / Wall Mounting Bracket

The Wall Mount Bracket allows a pump to be mounted on a wall or other vertical support in applications where it is necessary to have the pump mounted above a tank or drum.

P/N	DESCRIPTION	LIST PRICE
E00070	Wall Mount Bracket for Metering Pumps	$59.00

Foot Valves

Walchem foot valves are used for the suction side of the pump to provide both filtering of large particles and a check valve for added priming benefits. These consist of 14 different parts and are available to fit various different sizes in tubing. These valves are also available in a range of different materials, allowing for usage with multiple liquids.

P/N	DESCRIPTION	LIST PRICE
FSFCN-8U	VALVE, FOOT, 1/2 FC, FLEXCON	$132.00
FSFC01-8U	VALVE, FOOT, 1/2 FC01, FLEXCON	$147.00
FSFCT-50	ALVE, FOOT, 1/2 MNPT, FC	$158.00
FSPAT-50	ALVE, FOOT, 1/2 MNPT, PA	$95.00
FSPCT-50	ALVE, FOOT, 1/2 MNPT, PC	$63.00
FSPET-50	ALVE, FOOT, 1/2 MNPT, PE	$63.00
FSTAT-50	ALVE, FOOT, 1/2 MNPT, TA	$164.00
FSTCT-50	ALVE, FOOT, 1/2 MNPT, TC	$130.00
FSTET-50	ALVE, FOOT, 1/2 MNPT, TE	$130.00
FSVCT-50	ALVE, FOOT, 1/2 MNPT, VC	$63.00
FSVET-50	ALVE, FOOT, 1/2 MNPT, VE	$63.00
FSVFT-50	ALVE, FOOT, 1/2 MNPT, VF	$63.00
FSPAN-8U	VALVE, FOOT, 1/2 PA, FLEXCON	$79.00
FSPCN-8U	VALVE, FOOT, 1/2 PC, FLEXCON	$58.00
FSPEN-8U	VALVE, FOOT, 1/2 PE, FLEXCON	$58.00
FSTAN-8U	VALVE, FOOT, 1/2 TA, FLEXCON	$144.00
FSTCN-8U	VALVE, FOOT, 1/2 TC, FLEXCON	$111.00
FSTEN-8U	VALVE, FOOT, 1/2 TE, FLEXCON	$111.00
FSVCN-8U	VALVE, FOOT, 1/2 VC, FLEXCON	$58.00
FSVEN-8U	VALVE, FOOT, 1/2 VE, FLEXCON	$58.00
FSVFN-8U	VALVE, FOOT, 1/2 VF, FLEXCON	$58.00

P/N	DESCRIPTION	LIST PRICE
FSFCT-25	VALVE, FOOT, 1/4 MNPT, FC	$139.00
FSPAT-25	VALVE, FOOT, 1/4 MNPT, PA	$81.00
FSPCT-25	VALVE, FOOT, 1/4 MNPT, PC	$55.00
FSPET-25	VALVE, FOOT, 1/4 MNPT, PE	$55.00
FSTAT-25	VALVE, FOOT, 1/4 MNPT, TA	$145.00
FSTCT-25	VALVE, FOOT, 1/4 MNPT, TC	$118.00
FSTET-25	VALVE, FOOT, 1/4 MNPT, TE	$118.00
FSVCT-25	VALVE, FOOT, 1/4 MNPT, VC	$55.00
FSVET-25	VALVE, FOOT, 1/4 MNPT, VE	$55.00
FSVFT-25	VALVE, FOOT, 1/4 MNPT, VF	$55.00
FSFCT-75	VALVE, FOOT, 3/4 MNPT, FC	$169.00
FSPCT-75	VALVE, FOOT, 3/4 MNPT, PC	$63.00
FSPET-75	VALVE, FOOT, 3/4 MNPT, PE	$63.00
FSTCT-75	VALVE, FOOT, 3/4 MNPT, TC	$144.00
FSVCT-75	VALVE, FOOT, 3/4 MNPT, VC	$63.00
FSVET-75	VALVE, FOOT, 3/4 MNPT, VE	$63.00
FSVFT-75	VALVE, FOOT, 3/4 MNPT, VF	$63.00
FSFCN-7U	VALVE, FOOT, 3/8 FC, FLEXCON	$106.00
FSFC01-7U	VALVE, FOOT, 3/8 FC01, FLEXCON	$110.00
FSPAN-7U	VALVE, FOOT, 3/8 PA, FLEXCON	$67.00
FSPCN-7U	VALVE, FOOT, 3/8 PC, FLEXCON	$51.00

POWERTURN MACHINE Gauge Guards

PowerTurn Gauge Guards enable standard pressure gauges to be used in corrosive applications. The upper chamber on the instrument side is filled with a compatible fill fluid. A diaphragm isolates this chamber from the lower chamber while transmitting process pressure to the instrument. Features include precision-machined housing, multiple material options, broad pressure range, multiple dial sizes and orientations, and pre-filled transfer fluid when purchased with an instrument.

PSI	P/N	PVC (V)	POLYPRO (P)	CPVC (C)	316SS (S)	PVDF (K)
30	PT-GG-_T-S25-030G-00	$192.00	$-	$192.00	$192.00	$192.00
60	PT-GG-_T-S25-060G-00	$192.00	$-	$192.00	$192.00	$192.00
100	PT-GG-_T-S25-100G-00	$192.00	$-	$192.00	$192.00	$192.00
160	PT-GG-_T-S25-160G-00	$192.00	$-	$192.00	$192.00	$192.00
200	PT-GG-_T-S25-200G-00	$192.00	$-	$192.00	$192.00	$192.00

Compression Fittings

JACO compression fittings are available in size ranges from 1/8” through 7/8” tube O.D. in all common figurations, such as union, bulkhead, male and female connectors, male branch and male run trees, tee unions and ferrule nuts. Various resins are used depending on the application. JACO plastic fittings are made of either nylon, acetal copolymer, polypropylene, or polyvinylidene fluoride. The fittings offer good electrical insulating qualities which eliminate electrolytic action that usually corrodes tubing when dissimilar metal meets a fitting. They also have the ability to absorb mechanical and acoustical vibrations because of the low density and softness of plastic, an inherently low resistance to flow (due to smooth internal surface), and a resistance to scale buildup.

Male Connector

P/N	DESCRIPTION	LIST PRICE
Jaco 10-4-4-P-PG	1/4 OD, 1/4 NPT, POLYPROPYLENE	$1.85
Jaco 10-4-6-P-PG	1/4 OD, 3/8 NPT, POLYPROPYLENE	$1.92
Jaco 10-6-4-P-PG	3/8 OD, 1/4 NPT, POLYPROPYLENE	$2.10
Jaco 10-6-6-P-PG	3/8 OD, 3/8 NPT, POLYPROPYLENE	$2.58
Jaco 10-6-8-P-PG	3/8 OD, 1/2 NPT, POLYPROPYLENE	$2.20
Jaco 10-6-8-K-PG	3/8 OD, 1/2 NPT, POLYVINYLIDENE FLUORIDE	$11.10
Jaco 10-8-4-P-PG	1/2 OD, 1/4 NPT, POLYPROPYLENE	$2.98
Jaco 10-8-6-P-PG	1/2 OD, 3/8 NPT, POLYPROPYLENE	$2.43
Jaco 10-8-6-K-PG	1/2 OD, 3/8 NPT, POLYVINYLIDENE FLUORIDE	$10.68
Jaco 10-8-8-P-PG	1/2 OD, 1/2 NPT, POLYPROPYLENE	$2.58
Jaco 10-8-8-K-PG	1/2 OD, 1/2 NPT, POLYVINYLIDENE FLUORIDE	$16.69
Jaco 10-10-8-P-PG	5/8 OD, 1/2 NPT, POLYPROPYLENE	$2.70

Female Connector

P/N	DESCRIPTION	LIST PRICE
Jaco 25-4-4-P-PG	1/4 OD, 1/4 NPT, POLYPROPYLENE	$2.31
Jaco 25-6-4-P-PG	3/8 OD, 1/4 NPT, POLYPROPYLENE	$2.79
Jaco 25-6-4-K-PG	3/8 OD, 1/4 NPT, POLYVINYLIDENE FLUORIDE	$7.32
Jaco 25-6-6-P-PG	3/8 OD, 3/8 NPT, POLYPROPYLENE	$2.18
Jaco 25-6-8-P-PG	3/8 OD, 1/2 NPT, POLYPROPYLENE	$2.60
Jaco 25-8-6-P-PG	1/2 OD, 3/8 NPT, POLYPROPYLENE	$3.70
Jaco 25-8-8-P-PG	1/2 OD, 1/2 NPT, POLYPROPYLENE	$2.80

Union Connector

P/N	DESCRIPTION	LIST PRICE
Jaco 15-4-P-PG	1/4 OD, POLYPROPYLENE	$2.76
Jaco 15-6-P-PG	3/8 OD, POLYPROPYLENE	$4.01
Jaco 15-6-K-PG	3/8 OD, POLYVINYLIDENE FLUORIDE	$12.93
Jaco 15-8-P-PG	1/2 OD, POLYPROPYLENE	$3.88

Reducing Union Connector

P/N	DESCRIPTION	LIST PRICE
Jaco 15-6-4-P-PG	3/8 x 1/4 OD, POLYPROPYLENE	$3.70
Jaco 15-8-6-P-PG	1/2 x 3/8 OD, POLYPROPYLENE	$3.48

Bulkhead Union Connector

P/N	DESCRIPTION	LIST PRICE
Jaco 20-4-P-PG	1/4 OD, POLYPROPYLENE	$3.56
Jaco 20-4-K-PG	1/4 OD, POLYVINYLIDENE FLUORIDE	$17.20
Jaco 20-6-P-PG	3/8 OD, POLYPROPYLENE	$4.81
Jaco 20-8-P-PG	1/2 OD, POLYPROPYLENE	$4.53
Jaco 20-8-K-PG	1/2 OD, POLYVINYLIDENE FLUORIDE	$19.23
Jaco 20-12-P-PG	3/4 OD, POLYPROPYLENE	#N/A!

Union Elbow Connector

P/N	DESCRIPTION	LIST PRICE
Jaco 50-4-P-PG	1/4 OD, POLYPROPYLENE	$2.90
Jaco 50-6-P-PG	3/8 OD, POLYPROPYLENE	$4.46
Jaco 50-8-P-PG	1/2 OD, POLYPROPYLENE	$5.88
Jaco 50-8-K-PG	1/2 OD, POLYVINYLIDENE FLUORIDE	$22.83

Union Tee Connector

P/N	DESCRIPTION	LIST PRICE
Jaco 70-4-P-PG	1/4 OD, POLYPROPYLENE	$4.18
Jaco 70-6-P-PG	3/8 OD, POLYPROPYLENE	$6.61
Jaco 70-8-P-PG	1/2 OD, POLYPROPYLENE	$5.80
Jaco 70-8-K-PG	1/2 OD, POLYVINYLIDENE FLUORIDE	$27.16

Male Branch Tee Connector

P/N	DESCRIPTION	LIST PRICE
Jaco 60-4-4-P-PG	1/4 OD, 1/4 NPT, POLYPROPYLENE	$3.48
Jaco 60-6-6-P-PG	3/8 OD, 3/8 NPT, POLYPROPYLENE	$5.09
Jaco 60-8-6-K-PG	1/2 OD, 3/8 NPT, POLYVINYLIDENE FLUORIDE	$23.98
Jaco 60-8-8-P-PG	1/2 OD, 1/2 NPT, POLYPROPYLENE	$6.54

Male Elbow Connector

P/N	DESCRIPTION	LIST PRICE
Jaco 40-4-4-P-PG	1/4 OD, 1/4 NPT, POLYPROPYLENE	$2.05
Jaco 40-4-4-K-PG	1/4 OD, 1/4 NPT, POLYVINYLIDENE FLUORIDE	$6.60
Jaco 40-4-6-P-PG	1/4 OD, 3/8 NPT, POLYPROPYLENE	$3.21
Jaco 40-6-4-P-PG	3/8 OD, 1/4 NPT, POLYPROPYLENE	$2.45
Jaco 40-6-6-P-PG	3/8 OD, 3/8 NPT, POLYPROPYLENE	$4.05
Jaco 40-6-6-K-PG	3/8 OD, 3/8 NPT, POLYVINYLIDENE FLUORIDE	$12.29
Jaco 40-8-4-P-PG	1/2 OD, 1/4 NPT, POLYPROPYLENE	$3.18
Jaco 40-8-6-P-PG	1/2 OD, 3/8 NPT, POLYPROPYLENE	$3.98
Jaco 40-8-8-P-PG	1/2 OD, 1/2 NPT, POLYPROPYLENE	$3.10
Jaco 40-8-8-K-PG	1/2 OD, 1/2 NPT, POLYVINYLIDENE FLUORIDE	$12.08
Jaco 40-10-8-P-PG	5/8 OD, 1/2 NPT, POLYPROPYLENE	$5.78

Male Run Tee Connector

P/N	DESCRIPTION	LIST PRICE
Jaco 75-4-4-P-PG	1/4 OD, 1/4 NPT, POLYPROPYLENE	$4.39
Jaco 75-6-6-P-PG	3/8 OD, 3/8 NPT POLYPROPYLENE	$5.26
Jaco 75-8-8-P-PG	1/2 OD, 1/2 NPT POLYPROPYLENE	$5.08

Female Elbow Connector

P/N	DESCRIPTION	LIST PRICE
Jaco 45-4-4-P-PG	1/4 OD, 1/4 NPT, POLYPROPYLENE	$3.28
Jaco 45-6-6-P-PG	3/8 OD, 3/8 NPT, POLYVINYLIDENE FLUORIDE	$3.33
Jaco 45-8-6-P-PG	1/2 OD, 3/8 NPT, POLYPROPYLENE	$3.90
Jaco 45-8-8-P-PG	1/2 OD, 1/2 NPT, POLYPROPYLENE	$6.16
Jaco 45-8-8-K-PG	1/2 OD, 1/2 NPT, POLYVINYLIDENE FLUORIDE	$13.43
Jaco 45-10-8-P-PG	5/8 OD, 1/2 NPT, POLYPROPYLENE	$6.65